ECE TYPE-APPROVAL CERTIFICATE

E24	Issued by:	Name of Administration: **National Standard Authority of Ireland** **1 Swift Square, Northwood, Santry, Dublin 9, Ireland** **D09 A0E4**	
	Concerning[2]:	Approval granted ~~Approval extended~~ ~~Approval refused~~ ~~Approval withdrawn~~ ~~Production definitely discontinued~~	
		Of a type of lamp pursuant to UN Regulation No. 148	
	Lamp:[2]	Rear-registration plate illuminating lamp ~~Direction indicator lamp~~ Stop lamp Position lamp ~~End-outline marker lamp~~ ~~Reversing lamp~~ ~~Manoeuvring lamp~~ ~~Rear fog lamp~~ ~~Parking lamp~~ ~~Daytime running lamp~~ ~~Side marker lamp~~	
Category of the lamp:	***MR, MS, LM1***	Change index:	***0***
Approval No:	***E24*148R00/02*0041*00***	Unique Identifier (UI) (If applicable)	

[1] Distinguishing number of the country which has granted/extended/refused/withdrawn approval (see approval provisions in this Regulation).
[2] Strike out what does not apply.

NSAI, 1 Swift Square, Northwood, Santry, Dublin 9, Ireland. Telephone: (+353+1) 807 3800, Facsimile: 01-807 3844

Approval No: ***E24*148R00/02*0041*00***

1.	Trade name or mark of the lamp:	***CD***
2.	Manufacturer's name for the type of lamp:	***TL-W-S***
	Variant (s):	***Variant 1: TL-W-S*** ***Variant 2: TL-NW-S***
3.	Manufacturer's name and address:	***Shanghai Jason Plastic Co., Ltd.*** ***B3, No. 108, Pengfeng Road, Malu Town,*** ***Jiading District, Shanghai, China***
4.	If applicable, name and address of manufacturer's representative:	***N/A***
5.	Submitted for approval on:	***31.05.2021***
6.	Technical service responsible for conducting approval tests:	***TÜV SÜD Auto Service GmbH,*** ***Westendstraße 199, D-80686 München***
7.	Date of test report issued by that service:	***17.05.2021***
8.	Number of report issued by that service:	***21-00914-CX-SHA-00***
9.	Concise description:	
9.1.	In case of	
9.1.1.	A rear-registration plate illuminating lamp:	
	Geometrical conditions of installation (position(s) and inclination(s) of the device in relation to the space to be occupied by the registration plate and/or different inclinations of this space):	***See manufacturer's information document***
9.1.2.	A direction indicator:	
	Sequential activation of light sources: yes/no[2]	***N/A***
9.1.3.	A reversing lamp:	
	The lamp shall be installed on a vehicle only as part of a pair of lamps: yes/no	***N/A***
9.1.4.	A manoeuvring lamp:	
	The maximum mounting height:	***N/A***

NSAI, 1 Swift Square, Northwood, Santry, Dublin 9, Ireland. Telephone: (+353+1) 807 3800, Facsimile: 01-807 3844

Approval No: ***E24*148R00/02*0041*00***

9.1.5. A daytime running lamp

Maximum luminous intensity does not exceed 700 cd:	***N/A***
9.2. By light signalling function and category:	***Rear position lamp MR, Stop lamp MS Rear registration plate lamp LM1***
For mounting either outside or ~~inside or both~~[2]	***Outside***
Colour of light emitted: red/~~white/amber/~~colourless[2]	***Red, Colourless***
Number, category and kind of light source(s):	***See test report 21-00914-CX-SHA-00 for full details***
Lamp approved for LED substitute light source(s):	***no***
If yes, category of LED substitute light source(s)	
Voltage and Wattage:	***See test report 21-00914-CX-SHA-00 for full details***
Light source module: ~~yes~~/no[2]	***No***
Light source module specific identification code:	***N/A***
Only for limited mounting height of equal to or less than 750 mm above the ground, if applicable: yes/no[2]	***No***
Geometrical conditions of installation and relating variations (if any):	***See manufacturer's information document***
Application of an electronic light source control gear/ variable intensity control:	
(a) being part of the lamp: yes/~~no~~[2]	***N/A***
(b) being not part of the lamp: ~~yes~~/no[2]	***N/A***
Input voltage(s) supplied by an electronic light source control gear/variable intensity control:	***N/A***
Electronic light source control gear/variable intensity control manufacturer and identification number (when the light source control gear is part of the lamp but is not included into the lamp body):	***N/A***
Variable luminous intensity if applicable: ~~yes~~/no	***No***

NSAI, 1 Swift Square, Northwood, Santry, Dublin 9, Ireland. Telephone: (+353+1) 807 3800, Facsimile: 01-807 3844

Approval No: ***E24*148R00/02*0041*00***

	Function(s) produced by an interdependent lamp forming part of an interdependent lamp system, if applicable:	***N/A***
9.3	The ~~front position lamp~~[2], rear position lamp[2], stop lamp[2], ~~end-outline marker lamp~~[2]~~, daytime running lamp~~[2] is only for use on a vehicle fitted with a tell-tale indicating failure: yes/no[2]	***No***
10.	Position of the approval mark:	***On the lens***
11.	Reason(s) for extension (if applicable):	***N/A***
12.	Approval granted~~/extended/refused/withdrawn~~[2]	***Granted***
13.	Approval granted for devices to be used on vehicles already in use only, ~~yes~~/no[2]	***No***
14.	Place:	***Dublin***
15.	Date:	***06th July, 2021***
16.	Signature:	

17. The list of documents deposited with the Type Approval Authority which has granted approval is annexed to this communication and may be obtained on request.

NSAI, 1 Swift Square, Northwood, Santry, Dublin 9, Ireland. Telephone: (+353+1) 807 3800, Facsimile: 01-807 3844

Approval No: ***E24*148R00/02*0041*00***

Index to the Information Package

Date of issue:	***06th July, 2021***
Date of latest amendment:	***N/A***
Reason for extension/revision:	***N/A***

1. Additional conditions, and advisory notes on legal alternatives

2. Test report(s)

- numbers(s):	***21-00914-CX-SHA-00***
- date of issue:	***17.05.2021***
- date of latest amendment:	***N/A***

3. Information document

- number(s):	***TL-W-S-00***
- date of issue:	***28.04.2021***
- date of latest amendment:	***N/A***

Documentation: ***24 pages***

NSAI, 1 Swift Square, Northwood, Santry, Dublin 9, Ireland. Telephone: (+353+1) 807 3800, Facsimile: 01-807 3844

Approval No: ***E24*148R00/02*0041*00***

Appendix: **Additional conditions, and advisory notes on legal alternatives**

A: Additional conditions:

1. The lamp, Type *TL-W-S* shall be marked as prescribed by the regulation.
2. Fitting instructions shall be supplied with each lamp, giving details of any limitations in the use of the lamp.
3. The lamp should be fitted in accordance with the fitting instructions.
4. The attached technical report, with any of its attachments, forms part of this Type Approval certificate.
5. Each individual product from series production shall be to the measurements specified in the attached drawings, and shall be manufactured only from the materials specified in the Approval documents.
6. Changes in the product are permitted only with the explicit permission of NSAI. Breaches of this requirement will lead to a withdrawal of the Type Approval, and in addition may be subject to criminal prosecution.
7. This Type Approval will expire when it is surrendered by the holder, or withdrawn by NSAI, or when the approved type of product no longer conforms to legal requirements. The recall of the Type Approval can be issued by NSAI when the conditions required for the issuing or continuation of the Type Approval are no longer current, or when the Approval holder is in breach of the duties attached to the Type Approval, or when it is established that the approved type no longer meets the requirements of traffic safety.
8. NSAI may at any time check the correct performance of the duties imposed by the grant of this Type Approval, and in order to do so, may make tests, or have tests made.
9. Changes in the company name, address or manufacturing site, as well as in any of the sales or other agents specified in the issuing of the approval must immediately be notified to the NSAI.
10. The duties imposed by the issuing of this certificate are not transferable. The legal protection of third parties is not affected by this certificate.
11. When the manufacture or sale of the vehicle, system, component or separate technical unit has not been started within one year of the date of issue of this certificate, then NSAI is to be informed. This requirement also applies when the manufacture or sale has been halted for more than one year, or when it ought to have been halted for more than one year. The initial commencement of manufacture or sale, or the resumption of manufacture or sale, shall then be notified to NSAI within one month of commencement or resumption.

B : Legal Options

Any objection to the requirements set out in this certificate shall be made within one month of the date of issue. The objection shall be made, in writing, to NSAI in Dublin

NSAI, 1 Swift Square, Northwood, Santry, Dublin 9, Ireland. Telephone: (+353+1) 807 3800, Facsimile: 01-807 3844

Test Report

No.: 21-00914-CX-SHA-00

Test of a type of component
with regard to

UN/ECE Regulation No. 148

including all amendments up to
supplement 02 to the 00 series of amendments

Approval subject:
Rear position lamp MR
Stop lamp MS
Rear registration plate lamp LM1

Approval status			
☑	Granting of a type approval		
☐	Extension/correction to type approval no.	:	---

E24*148R00/02*0041*00

I. General

Make (trade name of manufacturer)	:	CD			
Type	:	TL-W-S			
Variants	:	Variant 1: TL-W-S Variant 2: TL-NW-S			
Means of identification of type	:	By letters, TL-W-S, TL-NW-S, on the housing			
By category of lamp			Color	Light source(s)	Voltage & wattage
Rear position lamp	:	MR	Red	53*LEDs, Non-replaceable	12V/0.62W
Stop lamp	:	MS	Red	45*LEDs, Non-replaceable	12V/2.88W
Rear registration plate lamp		LM1	Colorless	2*LEDs, Non-replaceble	12V/0.29W
For mounting either outside or inside or both	:	Outside			
Light source module specific identification code	:	No			
Only for limited mounting height of equal to or less than 750 mm above the ground	:	No			
A direction indicator					
Sequential activation of light sources	:	N/A			
A reversing lamp					
The lamp shall be installed on a vehicle only as part of a pair of lamps	:	N/A			
Geometrical conditions of installation and relating variations, if any	:	See manufacturer’s information document			
Application of an electronic light source control gear/variable intensity control					
Being part of the lamp	:	N/A			
Being not part of the lamp	:	N/A			

Input voltage(s) supplied by an electronic light source control gear/ variable intensity control	: N/A
Electronic light source control gear/ variable intensity control manufacturer and identification number (when the light source control gear is part of the lamp but is not included into the lamp body)	: N/A
Variable luminous intensity	: No
Function(s) produced by an interdependent lamp forming part of an interdependent lamp system, if applicable	: N/A
The ~~front position lamp~~ (1), rear position lamp (1), stop lamp (1),~~ end-outline marker lamp~~ (1), ~~daytime running lamp~~ (1) is only for use on a vehicle fitted with a tell-tale indicating failure	: No
Name and address of manufacturer	: Shanghai Jason Plastic Co., Ltd. B3, No. 108, Pengfeng Road, Malu Town, Jiading District, Shanghai, China
Address of assembly plant	: Same as above
Location of the approval mark	: On the lens
If applicable, name and address of the manufacturer's representative	: N/A

II. Test results

Refer to the Annex II

III. Enclosures

Information folder No. TL-W-S-00 dated 2021-04-28 (YYYY-MM-DD)

IV. Statement of conformity

The mentioned information folder and the type described therein are in accordance with the test basis mentioned above. The worst-case was selected in accordance with document "Requirements for Test Reports (AS-PB-T-02)".
The test report may be reproduced and published in full and by the client only. It can be reproduced partially with the written permission of the test laboratory only.

TÜV SÜD Auto Service GmbH is designated as Technical Service by:

Approval authority	Country	Registration number
Kraftfahrt-Bundesamt (KBA)	Germany	KBA-P 00100-10
Vehicle Certification Agency (VCA)	United Kingdom	VCA-TS-006
Approval Authority of the Netherlands (RDW)	The Netherlands	RDWT-082-xx
National Standards Authority of Ireland (NSAI)	Ireland	Technical Service Number: 49
Société Nationale de Certification et d'Homologation (SNCH)	Luxembourg	13/B(g)

München, 2021-05-17 (YYYY-MM-DD)

Henry Chen

E24*148R00/02*0041*00

Annex I Reason of Extension

Correction of : ---

Modification of : ---

Addition of : ---

Deletion of : ---

Annex II Test results

1.	Test conditions	
1.1.	Technical data of the test samples	: Two samples were tested. Sample No. 1 and Sample No. 2. For information about the form of the lamp, the position of the reference point and the reference axis, see information document.
1.2.	Test procedures used	: According to ECE Regulation No.: 148.00
1.3.	Measuring and test equipment	: Full automatic photometric test system for automobile lamps EVERFINE PHOTO-E-INFO CO., LTD. Type GO-HD5
2.	Test results	
2.1.	General Specifications	: The devices have been designed and constructed that in normal conditions of use, and notwithstanding the vibrations to which they may be subjected in such use, their satisfactory operation remains assured and they retain the characteristics prescribed by this Regulation.

2.2. Intensity of light emitted

2.2.1. Rear position lamp

2.2.1.1. Sample No. 1, normal mode, 53 LEDs lit together, test voltage 13.5V.

No.	Point of the measurement		Limits [cd]		Measured values [cd]		Conclusion
			Min.	Max.	30 minutes	1 minute	
1	5L	10U	0.80	17.00	6.02	6.38	Complies
2	5R	10U	0.80	17.00	6.47	6.86	Complies
3	20R	5U	0.40	17.00	4.01	4.25	Complies
4	10R	5U	0.80	17.00	8.77	9.30	Complies
5	H	5U	2.80	17.00	9.12	9.67	Complies
6	10L	5U	0.80	17.00	7.11	7.54	Complies
7	20L	5U	0.40	17.00	2.87	3.04	Complies
8	10L	V	1.40	17.00	12.52	13.28	Complies
9	5L	V	3.60	17.00	12.97	13.75	Complies
10	H	V	4.00	17.00	12.91	13.69	Complies
11	5R	V	3.60	17.00	12.57	13.33	Complies
12	10R	V	1.40	17.00	11.82	12.53	Complies
13	20R	5D	0.40	17.00	8.29	8.79	Complies
14	10R	5D	0.80	17.00	11.93	12.65	Complies
15	H	5D	2.80	17.00	12.94	13.72	Complies
16	10L	5D	0.80	17.00	12.07	12.80	Complies
17	20L	5D	0.40	17.00	6.07	6.44	Complies
18	5L	10D	0.80	17.00	11.44	12.13	Complies
19	5R	10D	0.80	17.00	11.31	11.99	Complies
20	All directions Min.		0.05	---	0.40	0.42	Complies
21	All directions Max.		---	17.00	13.26	14.06	Complies

2.2.1.2. Sample No. 2, normal mode, 53 LEDs lit together, test voltage 13.5V.

No.	Point of the measurement		Limits [cd]		Measured values [cd]		Conclusion
			Min.	Max.	30 minutes	1 minute	
1	5L	10U	0.80	17.00	6.46	6.86	Complies
2	5R	10U	0.80	17.00	7.19	7.63	Complies
3	20R	5U	0.40	17.00	4.16	4.42	Complies
4	10R	5U	0.80	17.00	8.94	9.49	Complies
5	H	5U	2.80	17.00	9.54	10.13	Complies
6	10L	5U	0.80	17.00	8.33	8.84	Complies
7	20L	5U	0.40	17.00	3.24	3.44	Complies
8	10L	V	1.40	17.00	11.53	12.24	Complies
9	5L	V	3.60	17.00	12.15	12.90	Complies
10	H	V	4.00	17.00	12.05	12.79	Complies
11	5R	V	3.60	17.00	11.94	12.67	Complies
12	10R	V	1.40	17.00	11.71	12.43	Complies
13	20R	5D	0.40	17.00	9.05	9.61	Complies
14	10R	5D	0.80	17.00	11.38	12.08	Complies
15	H	5D	2.80	17.00	12.56	13.33	Complies
16	10L	5D	0.80	17.00	10.95	11.62	Complies
17	20L	5D	0.40	17.00	6.56	6.96	Complies
18	5L	10D	0.80	17.00	10.24	10.87	Complies
19	5R	10D	0.80	17.00	10.57	11.22	Complies
20	All directions Min.		0.05	---	0.36	0.38	Complies
21	All directions Max.		---	17.00	12.76	13.54	Complies

2.2.1.3. Sample No. 1, failed mode, 49 LEDs lit together, test voltage 13.5V.

No.	Point of the measurement		Limits [cd]		Measured values [cd]		Conclusion
			Min.	Max.	30 minutes	1 minute	
1	5L	10U	0.80	17.00	5.67	5.99	Complies
2	5R	10U	0.80	17.00	5.98	6.31	Complies
3	20R	5U	0.40	17.00	3.75	3.96	Complies
4	10R	5U	0.80	17.00	8.17	8.63	Complies
5	H	5U	2.80	17.00	8.46	8.93	Complies
6	10L	5U	0.80	17.00	6.53	6.90	Complies
7	20L	5U	0.40	17.00	2.68	2.83	Complies
8	10L	V	1.40	17.00	11.63	12.28	Complies
9	5L	V	3.60	17.00	12.07	12.75	Complies
10	H	V	4.00	17.00	11.98	12.65	Complies
11	5R	V	3.60	17.00	11.62	12.27	Complies
12	10R	V	1.40	17.00	10.93	11.54	Complies
13	20R	5D	0.40	17.00	7.63	8.06	Complies
14	10R	5D	0.80	17.00	10.92	11.53	Complies
15	H	5D	2.80	17.00	11.65	12.30	Complies
16	10L	5D	0.80	17.00	11.27	11.90	Complies
17	20L	5D	0.40	17.00	5.63	5.94	Complies
18	5L	10D	0.80	17.00	10.67	11.27	Complies
19	5R	10D	0.80	17.00	10.45	11.03	Complies
20	All directions Min.		0.05	---	0.38	0.40	Complies
21	All directions Max.		---	17.00	12.28	12.97	Complies

2.2.1.4. Sample No. 2, failed mode, 49 LEDs lit together, test voltage 13.5V.

No.	Point of the measurement		Limits [cd]		Measured values [cd]		Conclusion
			Min.	Max.	30 minutes	1 minute	
1	5L	10U	0.80	17.00	5.72	6.07	Complies
2	5R	10U	0.80	17.00	6.63	7.03	Complies
3	20R	5U	0.40	17.00	3.93	4.17	Complies
4	10R	5U	0.80	17.00	8.56	9.08	Complies
5	H	5U	2.80	17.00	8.89	9.43	Complies
6	10L	5U	0.80	17.00	7.74	8.21	Complies
7	20L	5U	0.40	17.00	3.12	3.31	Complies
8	10L	V	1.40	17.00	10.61	11.26	Complies
9	5L	V	3.60	17.00	11.26	11.95	Complies
10	H	V	4.00	17.00	11.15	11.83	Complies
11	5R	V	3.60	17.00	11.06	11.73	Complies
12	10R	V	1.40	17.00	10.57	11.21	Complies
13	20R	5D	0.40	17.00	8.39	8.90	Complies
14	10R	5D	0.80	17.00	10.56	11.20	Complies
15	H	5D	2.80	17.00	11.63	12.34	Complies
16	10L	5D	0.80	17.00	10.15	10.77	Complies
17	20L	5D	0.40	17.00	6.05	6.42	Complies
18	5L	10D	0.80	17.00	9.58	10.16	Complies
19	5R	10D	0.80	17.00	9.82	10.42	Complies
20	All directions Min.		0.05	---	0.33	0.35	Complies
21	All directions Max.		---	17.00	11.86	12.58	Complies

2.2.2. Stop lamp

2.2.2.1. Sample No. 1, normal mode, 45 LEDs lit together, test voltage 13.5V.

No.	Point of the measurement		Limits [cd]		Measured values [cd]		Conclusion
			Min.	Max.	30 minutes	1 minute	
1	5L	10U	8.00	260.00	125.32	128.90	Complies
2	5R	10U	8.00	260.00	126.90	130.52	Complies
3	20R	5U	4.00	260.00	62.67	64.46	Complies
4	10R	5U	8.00	260.00	154.15	158.55	Complies
5	H	5U	28.00	260.00	160.36	164.94	Complies
6	10L	5U	8.00	260.00	156.45	160.92	Complies
7	20L	5U	4.00	260.00	64.43	66.27	Complies
8	10L	V	14.00	260.00	162.53	167.17	Complies
9	5L	V	36.00	260.00	171.28	176.17	Complies
10	H	V	40.00	260.00	202.74	208.53	Complies
11	5R	V	36.00	260.00	168.63	173.45	Complies
12	10R	V	14.00	260.00	160.16	164.73	Complies
13	20R	5D	4.00	260.00	95.74	98.47	Complies
14	10R	5D	8.00	260.00	145.91	150.08	Complies
15	H	5D	28.00	260.00	160.08	164.65	Complies
16	10L	5D	8.00	260.00	143.42	147.52	Complies
17	20L	5D	4.00	260.00	94.64	97.34	Complies
18	5L	10D	8.00	260.00	119.14	122.54	Complies
19	5R	10D	8.00	260.00	118.67	122.06	Complies
20	All directions Min.		0.30	---	2.92	3.00	Complies
21	All directions Max.		---	260.00	206.15	212.04	Complies

2.2.2.2. Sample No. 2, normal mode, 45 LEDs lit together, test voltage 13.5V.

No.	Point of the measurement		Limits [cd]		Measured values [cd]		Conclusion
			Min.	Max.	30 minutes	1 minute	
1	5L	10U	8.00	260.00	118.73	121.98	Complies
2	5R	10U	8.00	260.00	116.99	120.20	Complies
3	20R	5U	4.00	260.00	60.39	62.05	Complies
4	10R	5U	8.00	260.00	146.17	150.18	Complies
5	H	5U	28.00	260.00	154.23	158.46	Complies
6	10L	5U	8.00	260.00	149.83	153.94	Complies
7	20L	5U	4.00	260.00	62.61	64.33	Complies
8	10L	V	14.00	260.00	160.36	164.76	Complies
9	5L	V	36.00	260.00	168.36	172.97	Complies
10	H	V	40.00	260.00	197.38	202.79	Complies
11	5R	V	36.00	260.00	165.87	170.42	Complies
12	10R	V	14.00	260.00	158.36	162.70	Complies
13	20R	5D	4.00	260.00	90.41	92.89	Complies
14	10R	5D	8.00	260.00	142.51	146.42	Complies
15	H	5D	28.00	260.00	156.01	160.29	Complies
16	10L	5D	8.00	260.00	145.14	149.12	Complies
17	20L	5D	4.00	260.00	93.89	96.46	Complies
18	5L	10D	8.00	260.00	117.61	120.83	Complies
19	5R	10D	8.00	260.00	115.78	118.95	Complies
20	All directions Min.		0.30	---	2.78	2.86	Complies
21	All directions Max.		---	260.00	200.32	205.81	Complies

2.2.2.3. Sample No. 1, failed mode, 42 LEDs lit together, test voltage 13.5V.

No.	Point of the measurement		Limits [cd]		Measured values [cd]		Conclusion
			Min.	Max.	30 minutes	1 minute	
1	5L	10U	8.00	260.00	118.02	120.72	Complies
2	5R	10U	8.00	260.00	119.36	122.09	Complies
3	20R	5U	4.00	260.00	58.49	59.83	Complies
4	10R	5U	8.00	260.00	145.02	148.34	Complies
5	H	5U	28.00	260.00	150.56	154.01	Complies
6	10L	5U	8.00	260.00	146.28	149.63	Complies
7	20L	5U	4.00	260.00	60.53	61.92	Complies
8	10L	V	14.00	260.00	152.62	156.11	Complies
9	5L	V	36.00	260.00	161.54	165.24	Complies
10	H	V	40.00	260.00	190.88	195.25	Complies
11	5R	V	36.00	260.00	158.63	162.26	Complies
12	10R	V	14.00	260.00	150.84	154.29	Complies
13	20R	5D	4.00	260.00	89.59	91.64	Complies
14	10R	5D	8.00	260.00	138.37	141.54	Complies
15	H	5D	28.00	260.00	150.55	154.00	Complies
16	10L	5D	8.00	260.00	136.65	139.78	Complies
17	20L	5D	4.00	260.00	87.21	89.21	Complies
18	5L	10D	8.00	260.00	111.09	113.63	Complies
19	5R	10D	8.00	260.00	110.54	113.07	Complies
20	All directions Min.		0.30	---	2.78	2.84	Complies
21	All directions Max.		---	260.00	193.56	197.99	Complies

2.2.2.4. Sample No. 2, failed mode, 42 LEDs lit together, test voltage 13.5V.

No.	Point of the measurement		Limits [cd]		Measured values [cd]		Conclusion
			Min.	Max.	30 minutes	1 minute	
1	5L	10U	8.00	260.00	110.61	113.20	Complies
2	5R	10U	8.00	260.00	109.46	112.02	Complies
3	20R	5U	4.00	260.00	56.73	58.06	Complies
4	10R	5U	8.00	260.00	137.96	141.19	Complies
5	H	5U	28.00	260.00	145.07	148.46	Complies
6	10L	5U	8.00	260.00	140.34	143.62	Complies
7	20L	5U	4.00	260.00	58.55	59.92	Complies
8	10L	V	14.00	260.00	149.11	152.60	Complies
9	5L	V	36.00	260.00	157.94	161.63	Complies
10	H	V	40.00	260.00	185.13	189.46	Complies
11	5R	V	36.00	260.00	155.99	159.64	Complies
12	10R	V	14.00	260.00	149.93	153.44	Complies
13	20R	5D	4.00	260.00	84.52	86.50	Complies
14	10R	5D	8.00	260.00	133.12	136.23	Complies
15	H	5D	28.00	260.00	145.46	148.86	Complies
16	10L	5D	8.00	260.00	136.25	139.44	Complies
17	20L	5D	4.00	260.00	88.03	90.09	Complies
18	5L	10D	8.00	260.00	109.34	111.90	Complies
19	5R	10D	8.00	260.00	108.91	111.46	Complies
20	All directions Min.		0.30	---	2.59	2.65	Complies
21	All directions Max.		---	260.00	187.53	191.92	Complies

2.2.3. The ratio between the luminous intensities actually measured of the two lamps when turned on simultaneously at the intensity of the rear position lamp when turned on alone

No.	Point of the measurement		Limits		Measured values		Conclusion
			Min.	Max.	Sample No. 1	Sample No. 2	
4	10R	5U	5.00	---	18.43	17.23	Complies
5	V	5U	5.00	---	18.44	16.97	Complies
6	10L	5U	5.00	---	22.83	18.82	Complies
8	10L	H	5.00	---	13.86	14.78	Complies
9	5L	H	5.00	---	14.08	14.77	Complies
10	V	H	5.00	---	16.61	17.25	Complies
11	5R	H	5.00	---	14.26	14.77	Complies
12	10R	H	5.00	---	14.44	14.39	Complies
14	10R	5D	5.00	---	13.09	13.35	Complies
15	V	5D	5.00	---	13.28	13.32	Complies
16	10L	5D	5.00	---	12.72	14.08	Complies

2.3. Colour – Red

2.3.1 Rear position lamp

Sample	Measured values		Limits		Conclusion
	x	Y	y ≤ 0.335	y ≥ 0.980 - x	
No. 1	0.6790	0.3139	Yes	Yes	Complies
No. 2	0.6795	0.3146	Yes	Yes	Complies

2.3.2. Stop lamp

Sample	Measured values		Limits		Conclusion
	x	y	y ≤ 0.335	y ≥ 0.980 - x	
No. 1	0.6773	0.3136	Yes	Yes	Complies
No. 2	0.6779	0.3143	Yes	Yes	Complies

2.4. Rear registration plate lamp, category 1 (240 mm x 130 mm)

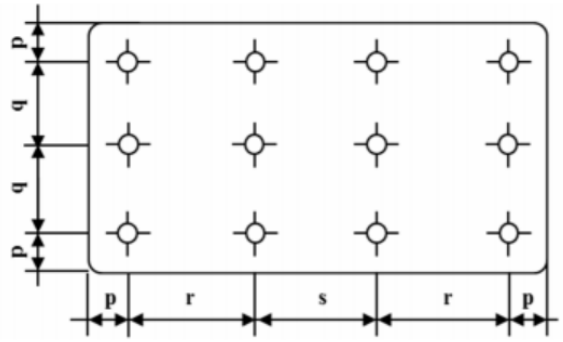

2.4.1. Sample No. 1 and sample No. 2, normal mode, 2*LEDs lit together, test voltage 13.5V, 1 minute (LUMINANCE ≥ 2cd/m2).

Luminance Measurements (B) Sample No. 1	1	2	3	4
	3.30	3.60	3.90	3.50
	5	6	7	8
	4.50	8.60	9.00	4.80
	9	10	11	12
	7.60	27.70	28.90	8.10
Luminance Measurements (B) Sample No. 2	1	2	3	4
	3.50	3.90	4.30	3.70
	5	6	7	8
	4.90	9.10	9.60	5.10
	9	10	11	12
	7.90	28.70	29.40	8.50

2.4.1.1. The gradient of the luminance between the values B1 and B2

	Sample No. 1	Sample No. 2
Requirement	Gradient of luminance: $\frac{B_2 - B_1}{d_1 - d_2\ (cm)} \leq 2 \times Bo / cm$	
Results	Max. of gradient of luminance= 3.3 2 x Bo / cm= 9.96 Complies	Max. of gradient of luminance= 3.5 2 x Bo / cm= 9.90 Complies
Conclusion	Complies	Complies

2.4.2. Sample No. 1 and sample No. 2, normal mode, 2*LEDs lit together, test voltage 13.5V, 30 minutes (LUMINANCE ≥ 2cd/m²).

Luminance Measurements (B) Sample No. 1	1	2	3	4
	3.00	3.30	3.50	3.20
	5	6	7	8
	4.10	7.80	8.20	4.40
	9	10	11	12
	6.90	25.20	26.30	7.40
Luminance Measurements (B) Sample No. 2	1	2	3	4
	3.20	3.60	3.90	3.40
	5	6	7	8
	4.50	8.30	8.80	4.70
	9	10	11	12
	7.20	26.20	26.90	7.80

2.4.2.1. The gradient of the luminance between the values B1 and B2

	Sample No. 1	Sample No. 2
Requirement	Gradient of luminance: $\frac{B_2 - B_1}{d_1 - d_2\ (cm)} \leq 2 \times Bo / cm$	
Results	Max. of gradient of luminance= 3 2 x Bo / cm= 9.06 Complies	Max. of gradient of luminance= 3.2 2 x Bo / cm= 9.06 Complies
Conclusion	Complies	Complies

2.4.3. Incidence of the light

	Sample No. 1	Sample No. 2
Requirement	According to this regulation paragraph 7.	
Results	The angle of incidence of the light on the surface of the plate does not exceed 82° at any point on the surface	
Conclusion	Complies	Complies

2.4.4. Colour of the light

	Sample No. 1	Sample No. 2
Requirement	According to this regulation paragraph 6.	
Results	The light of the lamp used in the illuminating device is sufficiently colourless not to cause any appreciable change in the colour of the registration plate.	
Conclusion	Complies	Complies

2.5. Apparent surface

	Limit (O)	Limit (I)	Limit (U)	Limit (D)
Stop lamp	61 mm	61 mm	41 mm	41 mm
Rear position lamp	61 mm	61 mm	41 mm	41 mm
Rear registration plate lamp	21 mm	21 mm	12 mm	12 mm

3. Specimen submitted to test on : 2021-04-28 (YYYY-MM-DD)

4. Place and date of the test : Jiangsu Huachen Vehicle Inspection Co., Ltd., Zhenjiang City, P.R. China
2021-05-11 (YYYY-MM-DD)

Information folder No. :	TL-W-S-00
First application date :	April 28, 2021

1. Specification data

Type		TL-W-S		
Variant		Variant 1: TL-W-S Variant 2: TL-NW-S		
Function		Rear group lamp		
		Stop lamp	Rear position lamp	Rear registration plate lamp
Color		Red	Red	Colorless
Rated	Voltage	12V	12V	12V
	Wattage	2.88W	0.62W	0.29W
Application Regulation ECE		R148.00 MS	R148.00 MR	R148.00 LM1
Location of marking	Number and category of light source	45*LEDs	53*LEDs	2*LEDs
		Non-replaceable light source		
		Marked on housing		
	Trade mark	CD		
		Marked on lens		
	Approval mark	Marked on lens		
	Type	Marked on housing		

2. Construction and material

Construction		Material	Remarks
Outer lens	Stop lamp + Rear position lamp	PC	Color: Smoky grey
	Rear registration plate lamp	PC	Color: Clear
Inner lens	Stop lamp + Rear position lamp	PMMA	Color: Clear
Housing		ABS	--
Electrical Wiring		Copper covered with insulation	--

3. Name and address of manufacturer : Shanghai Jason Plastic Co., Ltd.
B3, No. 108, Pengfeng Road, Malu Town,
Jiading District, Shanghai, China

4. Name and address of the assembly plant : See 3.

5. Name and address of the manufacturer's representative : N/A

6: Apparent surface

U= Upper limit

D= Down limit

I= Inside limit

O= Outside limit

⊕ :Reference center

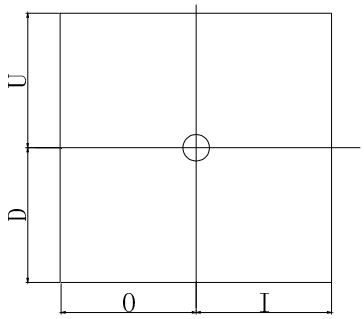

Unit: mm

Function	Limit (O)	Limit (I)	Limit (U)	Limit (D)
Stop lamp	61	61	41	41
Rear position lamp	61	61	41	41
Rear registration plate lamp	21	21	12	12
--	--	--	--	--

Variant 1: TL-W-S (With Rear registration plate lamp)

Front view

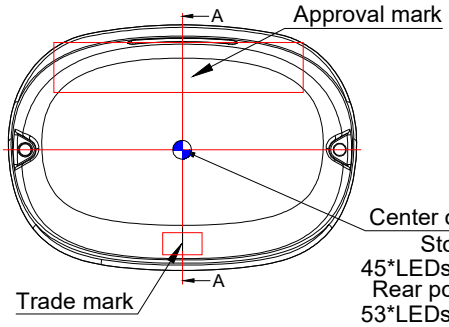

Section A-A

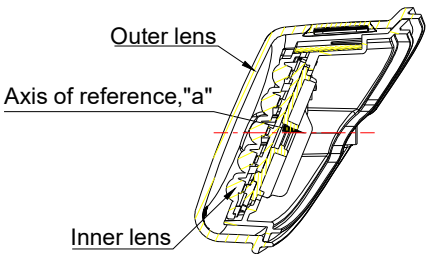

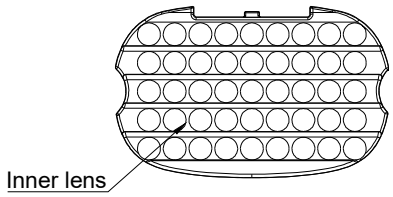

Top view

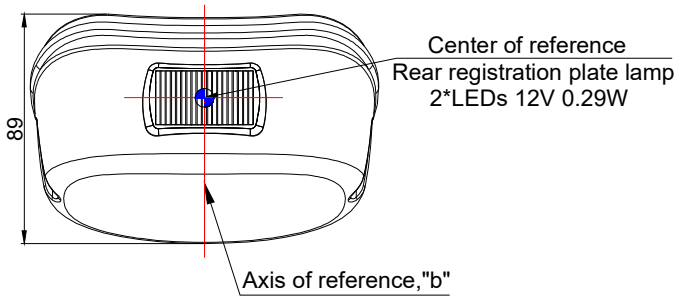

NOTE:
1. "a": Horizontal Plane of Vehicle
2. "b": Longitudinal Plane of Vehicle

Trade mark

CD

Back view

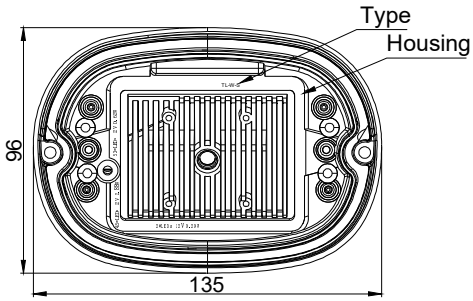

Approval mark

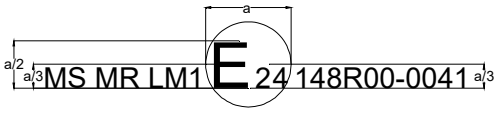

a=5mm min

Product Type	TL-W-S
General assembly drawing	
Drawing No.	TL-W-S-01

Information folder No. :	TL-W-S-00
First application date :	April 28, 2021

Variant 2: TL-NW-S (Without Rear registration plate lamp)

Front view

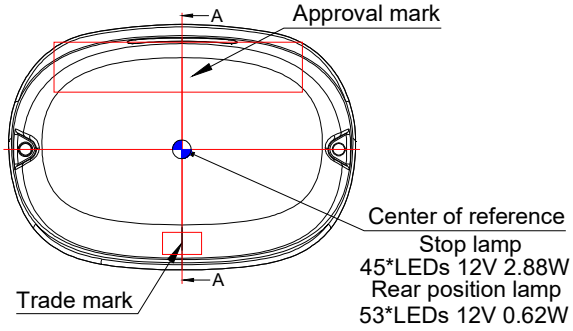

Section A-A

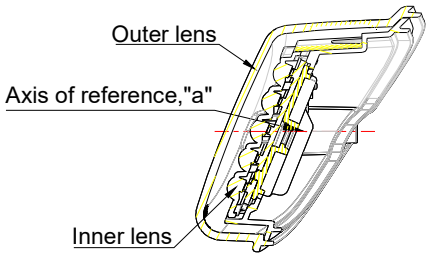

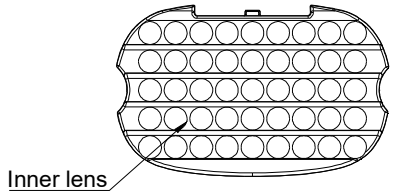

Top view

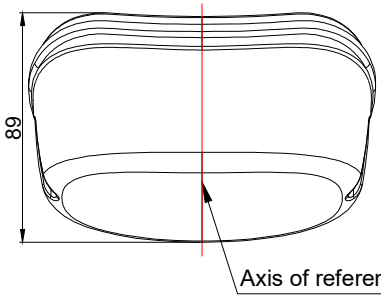

NOTE:
1. "a": Horizontal Plane of Vehicle
2. "b": Longitudinal Plane of Vehicle

Trade mark

CD

Back view

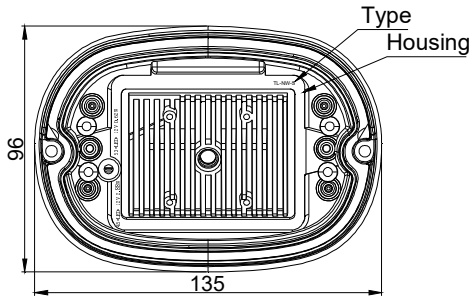

Approval mark

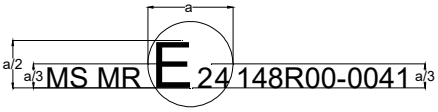

a=5mm min

Product Type	TL-W-S
General assembly drawing	
Drawing No.	TL-W-S-02

Installation requirements of rear license plate

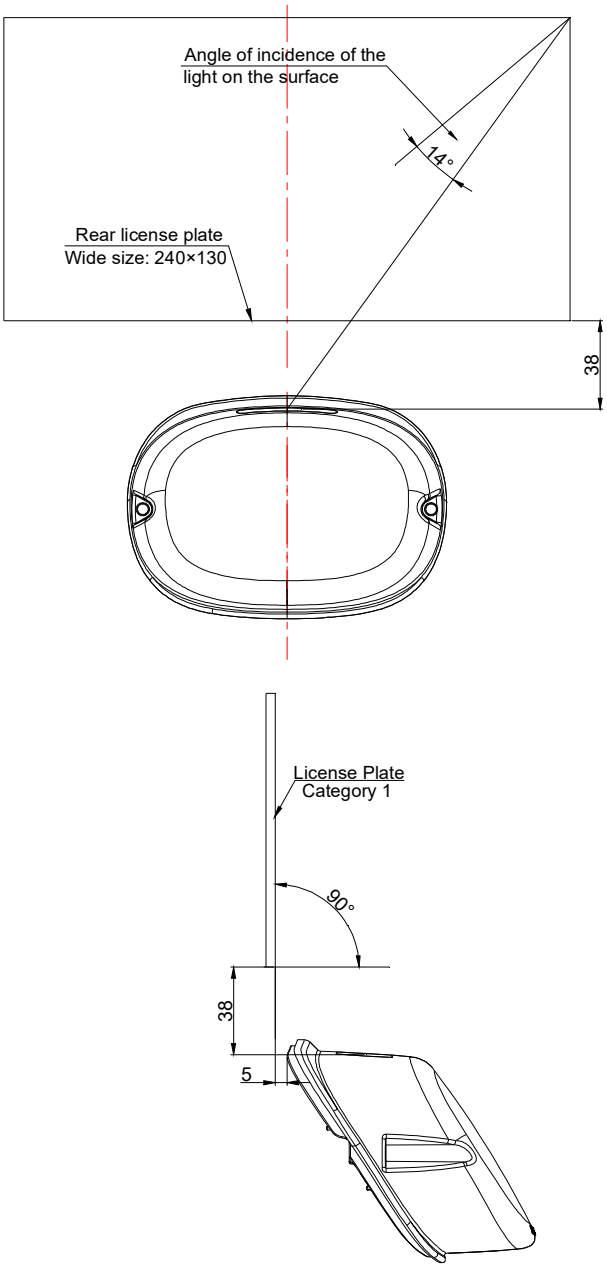

Product Type	TL-W-S
Installation requirements	
Drawing No.	TL-W-S-03

Information folder No. :	TL-W-S-00
First application date :	April 28, 2021

Stop lamp

45*LEDs 12V 2.88W

Rear position lamp

53*LEDs 12V 0.62W

Rear registration plate lamp

2*LEDs 12V 0.29W

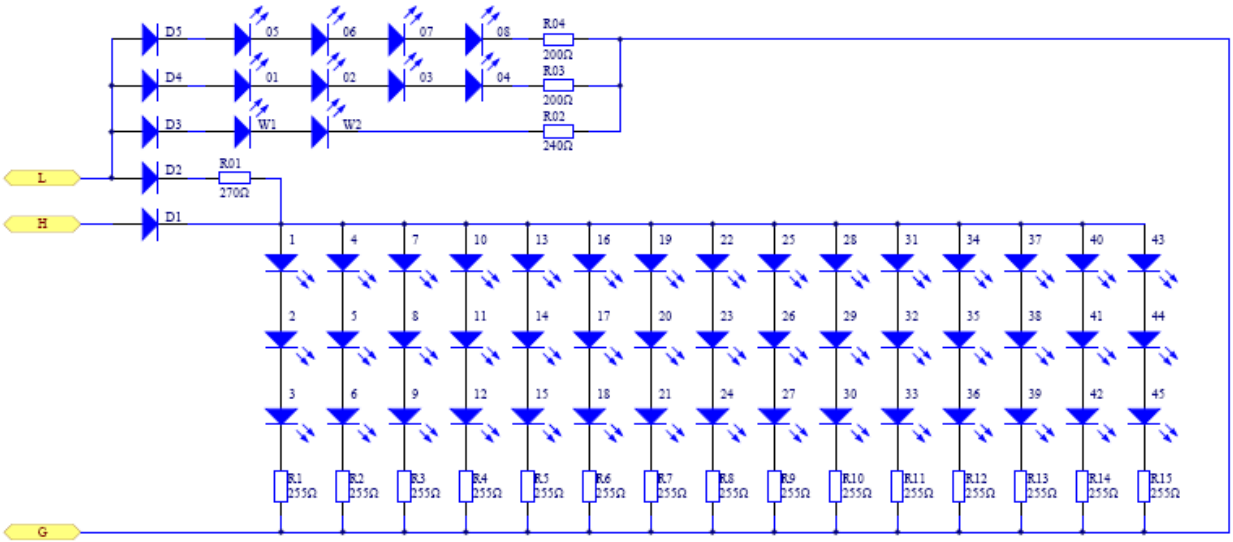

Product Type	TL-W-S
Led circuit diagram	
Drawing No.	TL-W-S-04