ECE TYPE-APPROVAL CERTIFICATE

E24

Communication concerning:[2] Approval granted
~~Approval extended~~
~~Approval refused~~
~~Approval withdrawn~~
~~Production definitely discontinued~~

of a type of device or system pursuant to UN Regulation No. 149

Class of the device:	***DS***	Change index:	***0***
Approval No:	***E24*149R00/07*0065*00***		
Unique Identifier (UI) (If applicable)		***N/A***	
Reason(s) for extension (if applicable):		***N/A***	

1. Trade name or mark of the device or system: ***Custom Dynamics***

2. Manufacturer's name for the type of device or system: ***SD2***

3. Manufacturer's name and address: ***SHENZHEN CARJENO TECHNOLOGY CO., LTD. B2, 7th Floor, No. 30, Third Industrial Zone, Houting Community, Shajing Street,Bao'an District, Shenzhen City***

4. If applicable, name and address of manufacturer's representative: ***N/A***

5. Submitted for approval on: ***05.09.2024***

6. Technical Service responsible for conducting approval tests: ***TÜV NORD Mobilität GmbH & Co. KG IFM - Institut für Fahrzeugtechnik und Mobilität Schönscheidtstr. 28 D-45307 Essen***

7. Date of report issued by that service: ***05.09.2024***

8. Number of report issued by that service: ***CS149-A0-2024-02271***

[1] Distinguishing number of the country which has granted/extended/refused/withdrawn approval (see approval provisions in the Regulation).
[2] Strike out what does not apply.

NSAI, 1 Swift Square, Northwood, Santry, Dublin 9, Ireland. Telephone: (+353+1) 807 3800, Facsimile: 01-807 3844

Approval No: ***E24*149R00/07*0065*00***

9. Brief description:

9.1. For Headlamps of Classes A and B[1]

9.1.1. Category as described by the relevant marking:[3] ***N/A***

9.1.2. Number, category and kind of light source(s): ***N/A***

9.1.3. Reference luminous flux used for the principal passing-beam (lm): ***N/A***

9.1.4. Principal passing-beam operated at approximately (V): ***N/A***

9.1.5. Measures according to paragraph 4.12. of this Regulation: ***N/A***

9.1.6. Number and specific identification code(s) of LED module(s) and for each LED module a statement whether it is replaceable or not: *yes/no*[1] ***N/A***

9.1.7. Number and specific identification code(s) of electronic light source Control gear(s) ***N/A***

9.1.8. Total objective luminous flux as described in paragraph 4.5.2.6. of this Regulation exceeds 2.00 10^3 lumens: yes/no/does not apply[1] ***N/A***

9.1.9. The adjustment of the cut-off has been determined at: 10 m/25 m/does not apply[1] ***N/A***

The determination of the minimum sharpness of the "cut-off" has been carried out at: 10 m/25 m/does not apply[1] ***N/A***

9.2. For headlamps of Class D

9.2.1. Headlamp/system submitted for approval as type:[4] ***N/A***

---

[3] Indicate the appropriate marking selected from the list below:

C, C, C , R, R PL, CR, CR, CR , C/R, C/R, C/R , C/ , C/ , C/ ,

C, PL, C PL, C PL, CR PL, CR PL, CR PL, C/R PL, C/R PL, C/R PL,

C/PL, C/PL, C/PL

HC, HC, HC , HR, HR PL, HCR, HCR, HCR, HC/R, HC/R, HC/R, HC/, HC/, HC/,

HC PL, HC PL, HC PL, HCR PL, HCR PL, HCR PL, HC/R PL, HC/R PL, HC/R PL,

HC/PL, HC/PL, HC/PL

[4] Indicate the appropriate marking selected from the list below:

DC, DC/, DC/PL, DR, DCR, DC/R, DC PL, DR PL, DCR DC/R
DC, DCR, DC/R, DC/, DC PL, DCR PL, DC/R PL, DC/PL, PL, PL,

DC, DCR, DC/R, DC/, DC PL, DCR PL, DC/R PL, DC/PL,

NSAI, 1 Swift Square, Northwood, Santry, Dublin 9, Ireland. Telephone: (+353+1) 807 3800, Facsimile: 01-807 3844

9.2.2. The passing beam light source may/may not1 be lit simultaneously with the driving beam light source and/or another reciprocally incorporated headlamp. ***N/A***

9.2.3. The rated voltage of the device is: ***N/A***

9.2.4. Number, category and kind of light source(s): ***N/A***

9.2.4.1. If more than one objective luminous flux value is specified: ***N/A***

Objective luminous flux value used for the principal passing beam ***N/A***

9.2.4.2. If more than one objective luminous flux value is specified: ***N/A***

Objective luminous flux value used for the driving beam ***N/A***

9.2.5. Trade name and identification number of separate ballast(s) or part(s) of ballast(s): ***N/A***

9.2.6. The adjustment of the "cut-off" has been determined at 10 m/25 m.(2) ***N/A***

The determination of the minimum sharpness of the "cut-off" has been carried out at 10 m/25 m.[1] ***N/A***

9.2.7. Number and specific identification code(s) of LED module(s): ***N/A***

9.2.8. Distributed lighting system with one common gas-discharge light source: Yes/No[1] ***N/A***

9.2.9. Remarks (if any): ***N/A***

9.2.10. Measures according to paragraph 4.12. of this Regulation: ***N/A***

9.3. For AFS – Systems

9.3.1. Category as described by the relevant marking[5] ***N/A***

9.3.2. Number, category and kind of light source(s) ***N/A***

9.3.2.1. Number and specific identification code(s) of LED module(s) and for each LED module a statement whether it is replaceable or not: yes/no[1] ***N/A***

9.3.2.2. Number and specific identification code(s) of electronic light source control gear(s), if applicable ***N/A***

9.3.2.3. Total objective luminous flux as described in paragraph 4.5.2.6. of This Regulation exceeds 2,000 lumen: yes/no[1] ***N/A***

NSAI, 1 Swift Square, Northwood, Santry, Dublin 9, Ireland. Telephone: (+353+1) 807 3800, Facsimile: 01-807 3844

9.3.3. (a) Indications according to paragraph 5.3.5.1. of this Regulation (which lighting unit(s) provide a "cut-off" as defined in Annex 5 of this Regulation, that projects into a zone extending from 6 degrees left to 4 degrees right and upwards from a horizontal line positioned at 0.8 degree down) ***N/A***

(b) The adjustment of the "cut-off" has been determined at 10 m / 25 m[1] ***N/A***

(c) The determination of the minimum sharpness of the "cut-off" has been carried out at 10 m / 25 m[1] ***N/A***

9.3.4. The vehicle(s) for which the system is intended as original equipment ***N/A***

9.3.5. Whether approval is sought for a system which is not intended to be included as part of the approval of a vehicle type according to UN Regulation No. 48: yes/no[1] ***N/A***

9.3.5.1. If in the affirmative: information sufficient to identify the vehicle(s) for which the system is intended ***N/A***

9.3.6. Indications according to paragraph 5.3.5.2. of this Regulation (which class E passing beam mode(s), if any, comply with a "data set" of Table 14 of this Regulation) ***N/A***

9.3.7. Whether approval is sought for a system intended to be installed on vehicles only, which provide means for a stabilization/limitation of the system's supply: yes/no[1] ***N/A***

9.3.8. The adjustment of the "cut-off" has been determined at 10 m / 25 m.[1] ***N/A***

The determination of the minimum sharpness of the "cut-off" has been Carried out at 10 m / 25 m.[1] ***N/A***

9.3.9. The system is designed to provide passing beams of:[6] ***N/A***

9.3.9.1. Class C □ Class V □ Class E □ Class W □

9.3.9.2. With the following mode(s), identified by the designation(s), if it applies[14]

Mode No. C	Mode No. V	Mode No. E	Mode No. W
Mode No. C	Mode No. V	Mode No. E	Mode No. W
Mode No. C	Mode No. V	Mode No. E	Mode No. W

---

[5] Indicate the appropriate marking as foreseen according to this Regulation for each installation unit or assembly of installation units.
[6] Mark with an X where applicable.
[7] To be extended if more modes are provided.
[8] To be continued if more units are provided.

NSAI, 1 Swift Square, Northwood, Santry, Dublin 9, Ireland. Telephone: (+353+1) 807 3800, Facsimile: 01-807 3844

9.3.9.3. Where the lighting units indicated below are energized[5,7, 8] for the mode No.

(a) If no bend lighting applies:
Left side No.1 □ No.3 □ No.5 □ No.7 □ No. 9 □ No.11 □
Right side No.2 □ No.4 □ No.6 □ No.8 □ No.10 □ No.12 □
(b) If bend lighting of category 1 applies:
Left side No.1 □ No.3 □ No.5 □ No.7 □ No. 9 □ No.11 □
Right side No.2 □ No.4 □ No.6 □ No.8 □ No.10 □ No.12 □
(c) if bend lighting of category 2 applies:
Left side No.1 □ No.3 □ No.5 □ No.7 □ No. 9 □ No.11 □
Right side No.2 □ No.4 □ No.6 □ No.8 □ No.10 □ No.12 □

9.3.9.4. The lighting units marked below are energized, when the system is in its neutral state[5, 7]

Left side No.1 □ No.3 □ No.5 □ No.7 □ No. 9 □ No.11 □
Right side No.2 □ No.4 □ No.6 □ No.8 □ No.10 □ No.12 □

9.3.9.5. The lighting units marked below are energized, when the system is in its traffic change function[5, 6, 7]

(a) If no bend lighting applies:
Left side No.1 □ No.3 □ No.5 □ No.7 □ No. 9 □ No.11 □
Right side No.2 □ No.4 □ No.6 □ No.8 □ No.10 □ No.12 □
(b) If bend lighting of category 1 applies:
Left side No.1 □ No.3 □ No.5 □ No.7 □ No. 9 □ No.11 □
Right side No.2 □ No.4 □ No.6 □ No.8 □ No.10 □ No.12 □
(c) if bend lighting of category 2 applies:
Left side No.1 □ No.3 □ No.5 □ No.7 □ No. 9 □ No.11 □
Right side No.2 □ No.4 □ No.6 □ No.8 □ No.10 □ No.12 □

9.3.10. The system is designed to provide a main beam[5, 6, 7]:

9.3.10.1. Yes □ No □

9.3.10.2. With the following mode(s), identified by the designation(s), if it applies:
Main beam mode No. M
Main beam mode No. M
Main beam mode No. M

9.3.10.3. Where the lighting units marked below are energized, for mode No.
(a) If no bend lighting applies:
Left side No.1 □ No.3 □ No.5 □ No.7 □ No. 9 □ No.11 □
Right side No.2 □ No.4 □ No.6 □ No.8 □ No.10 □ No.12 □
(b) If bend lighting applies:
Left side No.1 □ No.3 □ No.5 □ No.7 □ No. 9 □ No.11 □
Right side No.2 □ No.4 □ No.6 □ No.8 □ No.10 □ No.12 □

NSAI, 1 Swift Square, Northwood, Santry, Dublin 9, Ireland. Telephone: (+353+1) 807 3800, Facsimile: 01-807 3844

Approval No: ***E24*149R00/07*0065*00***

9.3.10.4. The lighting units marked below are energized, when the system is in its neutral state[6,8]

Left side No.1 □ No.3 □ No.5 □ No.7 □ No. 9 □ No.11 □
Right side No.2 □ No.4 □ No.6 □ No.8 □ No.10 □ No.12 □

9.3.10.5. The system is designed to provide an adaptation of the driving beam for:

Right-Hand and Left-Hand traffic: yes □ no □
Right-Hand traffic only: yes □ no □
Left-Hand traffic only: yes □ no □

9.4. For headlamps of Classes AS, BS, CS, DS and ES1

9.4.1. Category as described by the relevant marking:[9]	***WCR-DS PL***
9.4.2. Number, category and kind of light source(s), if any:	***One LED module 7*LEDs in total, 7*LEDs, 12V, 45W for driving beam 3*LEDs, 12V, 30W for passing beam,***
9.4.3. Number and specific identification code(s) of LED modules and for each LED module a statement whether it is replaceable or not: ~~yes~~/no[1]	***1 for HB and LB, non replaceable specific identification code: N/A***
9.4.4. Number and specific identification code(s) of electronic light source control gear(s), if any:	***N/A***
9.4.5. The determination of "cut-off" sharpness ~~yes~~ / no[1]	***No***
If yes, it was carried out at 10 m / 25 m[1]	
9.4.6. Trade name and identification number of separate ballast(s) or part(s) of ballast(s):	***N/A***
9.4.7. The passing beam light source may/~~may not~~[1] be lit simultaneously with the driving beam light source and/or another reciprocally incorporated headlamp.	***May***
9.4.8. The minimum bank angle(s) to satisfy the requirement of paragraph 5.4.5.2., if any	***N/A***
9.4.9. Primary Driving Beam: yes / ~~no~~[1]	***Yes***
Secondary Driving Beam: ~~yes~~ / no[1]	***No***
The Secondary Driving Beam shall only be operated together with a passing beam or a primary driving beam.	***N/A***

[9] Indicate the appropriate marking selected from the list below:

C-AS,	C- BS,	R- BS,	CR- BS,	C/ -BS,	C/R-BS,
	C-BS PL,	R-BS PL,	CR-BS PL,	C/ -BS PL,	C/R-BS PL,
WC-CS,	WC-DS,	WR-CS	WR-DS,	WCR-CS,	WCR-DS,
WC/-CS,	WC/-DS,	WC/R-CS,	WC/R-DS,	WC-CS PL,	
WC-DS PL,	WR-CS PL,	WR-DS PL,	WCR-CS PL,	WCR-DS PL,	

NSAI, 1 Swift Square, Northwood, Santry, Dublin 9, Ireland. Telephone: (+353+1) 807 3800, Facsimile: 01-807 3844

Approval No: ***E24*149R00/07*0065*00***

9.5. For front fog lamps Class F3

9.5.1. Class as described by the relevant marking:
(~~F3, F3/, F3PL, F3/PL~~) ***N/A***

9.5.2. Number, category and kind of light source(s): ***N/A***

9.5.3 LED module: yes/no[1] and for each LED module a statement whether it is replaceable or not: yes/no[1] ***N/A***

9.5.4. LED module specific identification code: ***N/A***

9.5.5. Application of electronic light source control gear:[10] yes/no[1]

Supply to the light source: ***N/A***
Specification of the light source control gear: ***N/A***
Input voltage:[11] ***N/A***
In the case of an electronic light source control gear not being part of the lamp: ***N/A***
Output signal specification: ***N/A***

9.5.6. Colour of light emitted: ~~***White/Selective yellow***~~ ~~***(4)***~~

9.5.7. Luminous flux of the light source (see paragraph 4.5.2.6.) greater than 2,000 lumens: yes/no[1] ***N/A***

9.5.8. Luminous intensity is variable: … yes/no[1] ***N/A***

9.5.9. The determination of the cut-off gradient (if measured) was carried out at 10 m / 25 m[1] ***N/A***

9.6. For cornering lamps

9.6.1. Number, category and kind of light source(s):[12] ***N/A***

9.6.2. Voltage and wattage: ***N/A***

WC/CS PL,	WC/-DS PL,	WC/R-CS PL,	WC/R-DS PL,		
WC+-CS,	WC+-DS,	WC+R-CS,	WC+R-DS,	C+-BS,	C+R-BS,
WC+-CS PL,	WC+-DS PL,	WC+R-CS PL,	WC+R-DS PL,	C+-BS PL,	C+R-BS PL
WC-ES,	WR-ES,	WCR-ES,	WC/-ES,	WC/R-ES,	WC-ES PL,
WR-ES PL,	WCR-ES PL,	WC/-ES PL,	WC/R-ES PL		
WC+-ES,	WC+R-ES,	WC+-ES PL,	WC+R-ES PL		

[10] The voltage specifications shall include the tolerances or voltage range as specified by the manufacturer and verified by this approval.

[11] The parameters of the input voltage including duty cycle, frequency, pulse shape and peak voltage shall be included.

NSAI, 1 Swift Square, Northwood, Santry, Dublin 9, Ireland. Telephone: (+353+1) 807 3800, Facsimile: 01-807 3844

Approval No: ***E24*149R00/07*0065*00***

9.6.3. Light source module: yes/no[1] ***N/A***

9.6.4. Light source module specific identification code: ***N/A***

9.6.5. Application of an electronic light source control gear:
(a) Being part of the lamp yes/no[1]
(b) Being not part of the lamp yes/no[1]

9.6.6. Input voltage supplied by an electronic light source control gear: ***N/A***

9.6.7. Electronic light source control gear manufacturer and identification number (when the light source control gear is part of the lamp but is not included into the lamp body): ***N/A***

9.6.8. Geometrical conditions of installation and relating variations, if any: ***N/A***

10. Approval mark(s) position(s): ***On the lens***

11. Reason(s) for extension of approval (if applicable): ***N/A***

12. Approval granted / ~~extended / refused / withdrawn~~[1] ***Granted***

13. Place: ***Dublin***

14. Date: ***21st October, 2024***

15. Signature:

NATIONAL STANDARDS AUTHORITY OF IRELAND
NSAI Certification
TRANSPORT DEPARTMENT

16. The list of documents deposited with the Type Approval Authority, which has granted approval is annexed to this communication and may be obtained on request.

---

[12] For cornering lamps with non-replaceable light sources indicate the number and total wattage of the light sources used.

NSAI, 1 Swift Square, Northwood, Santry, Dublin 9, Ireland. Telephone: (+353+1) 807 3800, Facsimile: 01-807 3844

Approval No: ***E24*149R00/07*0065*00***

Index to the Information Package

Date of issue:	***21st October, 2024***
Date of latest amendment:	***N/A***
Reason for extension/revision	***N/A***

1. Additional conditions, and advisory notes on legal alternatives

2. Test report(s)

- numbers(s):	***CS149-A0-2024-02271***
- date of issue:	***05.09.2024***
- date of latest amendment:	***N/A***

3. Information document

- numbers(s):	***SD2-00***
- date of issue:	***16.05.2024***
- date of latest amendment:	***N/A***

Documentation: ***25 pages***

NSAI, 1 Swift Square, Northwood, Santry, Dublin 9, Ireland. Telephone: (+353+1) 807 3800, Facsimile: 01-807 3844

Approval No: ***E24*149R00/07*0065*00***

Appendix: **Additional conditions, and advisory notes on legal alternatives**

A: Additional conditions:

1. The lamp, Type *SD2* shall be marked as prescribed by the regulation.
2. Fitting instructions shall be supplied with each lamp, giving details of any limitations in the use of the lamp.
3. The lamp should be fitted in accordance with the fitting instructions.
4. The attached technical report, with any of its attachments, forms part of this Type Approval certificate.
5. Each individual product from series production shall be to the measurements specified in the attached drawings, and shall be manufactured only from the materials specified in the Approval documents.
6. Changes in the product are permitted only with the explicit permission of NSAI. Breaches of this requirement will lead to a withdrawal of the Type Approval, and in addition may be subject to criminal prosecution.
7. This Type Approval will expire when it is surrendered by the holder, or withdrawn by NSAI, or when the approved type of product no longer conforms to legal requirements. The recall of the Type Approval can be issued by NSAI when the conditions required for the issuing or continuation of the Type Approval are no longer current, or when the Approval holder is in breach of the duties attached to the Type Approval, or when it is established that the approved type no longer meets the requirements of traffic safety.
8. NSAI may at any time check the correct performance of the duties imposed by the grant of this Type Approval, and in order to do so, may make tests, or have tests made.
9. Changes in the company name, address or manufacturing site, as well as in any of the sales or other agents specified in the issuing of the approval must immediately be notified to the NSAI.
10. The duties imposed by the issuing of this certificate are not transferable. The legal protection of third parties is not affected by this certificate.
11. When the manufacture or sale of the vehicle, system, component or separate technical unit has not been started within one year of the date of issue of this certificate, then NSAI is to be informed. This requirement also applies when the manufacture or sale has been halted for more than one year, or when it ought to have been halted for more than one year. The initial commencement of manufacture or sale, or the resumption of manufacture or sale, shall then be notified to NSAI within one month of commencement or resumption.

B : Legal Options

Any objection to the requirements set out in this certificate shall be made within one month of the date of issue. The objection shall be made, in writing, to NSAI in Dublin

NSAI, 1 Swift Square, Northwood, Santry, Dublin 9, Ireland. Telephone: (+353+1) 807 3800, Facsimile: 01-807 3844

Type : SD2
Manufacturer : SHENZHEN CARJENO TECHNOLOGY CO., LTD.

Test Report

Agreement concerning the adoption of uniform technical prescriptions for the wheeled vehicles, equipment and parts which can be fitted and/or be used on wheeled vehicles and the conditions for reciprocal recognition of approvals granted on the basis of these prescriptions

Uniform provisions concerning the approval of road illumination devices (lamps) and systems for power-driven vehicles

ECE-R149
as last amended

Supplement 07 to the 00 series of amendments

Approval status	
ECE	Number of approval
	E24*149R00/07*0065*00

Type : SD2
Manufacturer : SHENZHEN CARJENO TECHNOLOGY CO., LTD.

0. General information

0.1. Trademark or trade name of the lamp	:	Custom Dynamics
0.2. Manufacturer's name for the type of the lamp	:	SD2
0.3. version	:	---
0.4. Name and address of the manufacturer	:	SHENZHEN CARJENO TECHNOLOGY CO., LTD. B2, 7th Floor, No. 30, Third Industrial Zone, Houting Community, Shajing Street,Bao'an District, Shenzhen City
0.5. Name and address of manufacturer's authorized representative	:	---
0.6. No. of information folder	:	SD2-00
Date of issue	:	May 16, 2024
Date of last amendment	:	---

Type : SD2
Manufacturer : SHENZHEN CARJENO TECHNOLOGY CO., LTD.

1. Test object(s) and general test information

1.1. Test object(s)

identification number : ---

version : ---

Remark : Headlamp incorporating a lens made of plastic, applying for class WCR-DS PL.

Head lamp with driving beam and passing beam which can ~~not~~ be switched on or off simultaneously.

light source: Non-replaceable light source,

One LED module have 7*LEDs in total, 7 LEDs, 12V, 45W for Driving beam, 3 LEDs, 12V, 30W for Passing beam

1.2. Worse case : ~~About test for stability of photometric performance, the worst case was determined as of following:~~

~~The test shall be carried out with the filament light source operated at the highest voltage (28V) that can be used, and two high beam operated together.~~

1.3. General test information

1.3.1. Order issued by (if different from manufacturer) : ---

1.3.2. Test object / ~~test vehicle~~ received on : May 16, 2024

1.3.3. Test date : May 24~30, 2024

1.3.4. Test site : Zhejiang Aike Automobile Technology Service Co., Ltd. Building 3, Essence Adream of Space, No.350, Jinghua Road, Ningbo Hi-tech Zone Zhejiang, P.R. China

1.3.5. Remark : The results of the test refer exclusively to the object(s) mentioned under point 1.1 of this report.

Type : SD2
Manufacturer : SHENZHEN CARJENO TECHNOLOGY CO., LTD.

2. Test minutes

2.1. Test facilities : The test facilities are in compliance with the requirements of the Regulation

2.2. Test results : ~~The lamp has been tested according the amendments mentioned in Appendix 0. The photometric values were carried over from the basic report.~~

2.2.1 Temperature : 27 °C

2.2.2 Markings : The trade mark is marked clearly legible and indelible on lens.

Space for the approval mark and for additional symbols is provided on lens.The lens can not be separated from the housing.

The ~~filament lamp type~~ / voltage and wattage is clearly legible and indelible marked on housing of the lamp.

2.3. General specifications : The lamp is designed and made that, under normal use, their satisfactory operation is ensured and they retain the required characteristics.

The colour of the light emitted inside the field of the light distribution grid defined in item 4.16. is within the limits of the coordinates for **WHITE**.

The LED modules of the lamp complies with the relevant requirements as described in paragraph Annex 9.

LED module(s) was so designed as to be and to remain in good working order when in normal use.

The lamp is not fitted with a device enabling the correct adjustment on the lamp as to comply with the requirements applicable to it. The adjustment system is provided by a device where the lamp is fitted to.

Type : SD2
Manufacturer : SHENZHEN CARJENO TECHNOLOGY CO., LTD.

2.4. Requirements for LED modules and headlamps including LED modules

: A LED module is considered to have failed if any one of its LEDs has failed.

All samples are tested under the conditions as specified in paragraphs 4.6.3. of this Regulation.

For the measurement of electrical and photometric characteristics, the headlamp is operated in a dry and still atmosphere at an ambient temperature of 23 °C +5 °C.

Upon the request of the applicant the LED module is operated for 15 h and cooled down to ambient temperature before starting the tests as specified in this Regulation.

The headlamp of classes ~~A, B, D , AS, BS, CS,~~ DS, ~~ES and AFS~~ , the total objective luminous flux of all LED light sources and/or LED modules producing the principal passing beam and measured as described in paragraph 5. of Annex 9 (LED modules only) was ~~equal or greater than 1,000 lumens or~~ within the following limits.

The lamp was continued operation until photometric stability has occurred. The moment at which the photometry is stable is defined as the point in time at which the variation of the photometric value is less than 3 per cent within any 15 minutes period.

2.4.1. Colour rendering : $K1_{red}$= **0.09** $K2_{red}$= **0.09** limit ≥ 0.05

2.4.2.UV-radiation : $K1_{UV}$=**3.43x10^{-7}** $K2_{UV}$=**2.24x10^{-7}** limit ≤ 10^{-5} W/lm

2.4.3. Luminous flux : Luminous flux = **1953** lm ≥ 1000 lm *

Test results : passed / ~~failed~~

* Remark:

	Headlamps Class A/B/D/AFS	*Headlamps Class AS*	*Headlamps Class BS*	*Headlamps Class CS*	*Headlamps Class DS*	*Headlamps Class ES*
Passing beam minimum	1000 lumen	150 lumen	350 lumen	500 lumen	1,000 lumen	2,000 lumen
Passing beam maximum	---	900 lumen	1,000 lumen	2,000 lumen	2,000 lumen	---

Type : SD2
Manufacturer : SHENZHEN CARJENO TECHNOLOGY CO., LTD.

2.5. Photometric tests

2.5.1. Passing beam : For a correct aiming the passing beam produce a sufficiently sharp "cut-off" to permit a satisfactory visual adjustment with its aid as indicated in Paragraph 1 of Annex 6.

The aiming was carried out using a flat vertical screen set up at a distance of 10 or 25m forward of the headlamp and at right angles to the H-V. The screen shall be sufficiently wide to allow examination and adjustment of the "cut-off" of the passing beam over at least 3° on either side of the V-V line. The "cut-off" shall be substantially horizontal and shall be as straight as possible from at least 3° L to 3° R.

The headlamp was aimed according to Paragraph 3. of Annex 6.

The passing beam produces an adequate illumination without dazzle. No lateral variations detrimental to good visibility have been observed.

2.5.2. Driving lamp : The illumination measurements have been taken with the same alignment as for the passing beam. ~~The driving beam is adjusted that the area of maximum illumination is centred on the point HV.~~ Point HV was situated within the isolux 80% of EM.

Illumination (in cd) obtained on the screen (refer to Annex 4 of the Regulation) by the driving beam by means of LED module ~~or one uncoloured standard lamp producing the required light flux.~~

2.6. Explanatory note : Not applicable

2.7. Variants and components : not applicable

2.8. Test conclusion : Passed / ~~failed~~

Type : SD2
Manufacturer : SHENZHEN CARJENO TECHNOLOGY CO., LTD.

3. Remark concerning tested object(s)

All versions of the lamps as stated in the information document are covered with the tested version(s) and test object(s) respectively.

4. Appendices

0 List of modifications

1 Test minutes

2 Communication concerning the type approval

Information folder no. : SD2-00

5. Statement of conformity

The type described in this test report and the appendices attached are in compliance with the Test Specification mentioned above.

The samples / ~~test vehicles~~ used were representative in terms of the type to be approved.

The Test Report comprises pages 1 to 22.

The Test Report shall be reproduced and published in full only and by the client only. It shall be reproduced partially with the written permission of the Test Laboratory only.

TEST LABORATORY

TÜV NORD Mobilität GmbH & Co. KG
IFM - Institut für Fahrzeugtechnik und Mobilität,
Schönscheidtstr. 28, 45307 Essen, Germany

Designated Technical Service
Technical Service Number for NSAI: 115

Shanghai, September 05, 2024
RT / MM

Ryan Tong

B.S.M.E. R.Tong



Type : SD2
Manufacturer : SHENZHEN CARJENO TECHNOLOGY CO., LTD.

List of modifications

Appendix 0

More details for application of : **Date** :

Correction of : -

Modification of : -

Addition of : -

Deletion of : -

Type : SD2
Manufacturer : SHENZHEN CARJENO TECHNOLOGY CO., LTD.

Test minutes **Appendix 1**

1. Results of photometric tests of the **passing beam, class DS (<u>one minute</u>)**

illumination produced on the screen in cd						
Test Point/Line/Zone			sample No.1	sample No. 2	illumination required	
					Max.	Min.
2	0.86D	0	5495.6	7487.5	-	4900

Results of photometric tests of the **passing beam, class DS (<u>photometric stability</u>)**

illumination produced on the screen in cd						
Test Point/Line/Zone			sample No.1	sample No. 2	illumination required	
					Max.	Min.
1	0.86 D	3.5 R	3860.6	6856.3	13750	2000
2	0.86 D	0	5235.0	7175.0	-	4900
3	0.86 D	3.5 L	4444.4	7162.5	13750	2000
4	0.50 U	1.50 L	795.6	523.1	900	-
	0.50 U	1.50 R	832.5	491.9	900	-
5	2.00 D	15 L	8812.5	11906.0	-	1100
	2.00 D	15 R	8368.8	9075.0	-	1100
6	4.00 D	20 L	8387.5	10888.0	-	300
	4.00 D	20 R	10419.0	7781.3	-	300
7	0	0	926.9	583.8	1700	-
Line 1	2.00 D	9 L to 9 R	11811.0	12841.0	-	1350
8**	4.00 U	8.0 L	351.3	310.6	700	150(Σ 8 + 9 + 10)**
9**	4.00 U	0	430.0	335.0	700	
10**	4.00 U	8.0 R	429.4	228.1	700	
11**	2.00 U	4.0 L	560.0	412.5	900	300(Σ11 + 12 + 13)**
12**	2.00 U	0	596.3	410.0	900	
13**	2.00 U	4.0 R	602.5	400.0	900	
14**	0	8.0 L & 8.0 R	703.1	444.4	-	50**
15**	0	4.0 L & 4.0 R	819.4	520.6	900	100**
Zone 1	1U/8L-4U/8L-4U/8R-1U/8R-0/4R-0/1R-0.6U/0-0/1L-0/4L-1U/8L		856.5	592.6	900	-
Zone 2	>4U to <15 U	8 L to 8 R	440.0	352.0	700	-

<u>Notes:</u> * 0.25° tolerance allowed independently at each test point for photometry unless indicated otherwise.
** On request of the applicant during measurement of these points, the front position lamp approved to ECE Regulation No. 50 or Regulation 7 or UN Regulation No. 148 ; if combined, grouped, or reciprocally incorporated-shall be switched on.

Test results : passed / ~~failed~~

Type : SD2
Manufacturer : SHENZHEN CARJENO TECHNOLOGY CO., LTD.

2. **Results of photometric tests of the driving beam class DS**

One minute

illumination produced on the screen in cd			
	Sample No.1	sample No.2	illumination required
illumination at point of intersection (HV) of lines hh and vv	99190.0	103600.0	≥ 30000

Photometric stability

illumination produced on the screen in cd			
	Sample No.1	sample No.2	illumination required
maximum illumination I_M	95448.0	99780.0	215000≥ I_M ≥ 40000
illumination at point of intersection (HV) of lines hh and vv	95040.0	99180.0	≥ 30000
$I'_M = I_M /4300$	22.2	23.2	-
rounded off to the reference mark of	25		
H-2.5^{0}R & 2.5^{0}L	54500.0	56270.0	≥ 20000
H-5^{0}R & 5^{0}L	26840.0	25200.0	≥ 5000
H-9^{0}R & 9^{0}L	10590.0	8557.0	≥ 3400
H-12^{0}R & 12^{0}L	6206.0	4489.0	≥ 1000
2^{0}U-V	70740.0	70200.0	≥ 1700

Test results **: passed / ~~failed~~**

Type : SD2
Manufacturer : SHENZHEN CARJENO TECHNOLOGY CO., LTD.

3. Stability of photometric performance of head lamps in operation

3.1. Stability of photometric performance

3.1.1. Clean head lamp : The device was operated for 12 hours as described in Annex 7 paragraph 2.1 of the Regulation, with each light source of the specified functions lit successively for the prescribed time.

The visual inspection after this test did not show any distortion, deformation, cracking or change in color of either the headlamp lens or the external lens.

photometric test results (in cd)				
points on screen	initial	end of test	difference	allowable difference
passing beam 0.86D-3.5R	3860.6	3678.4	4.7%	10%
passing beam 0.86D-3.5L	4444.4	4246.2	4.5%	10%
passing beam 0.50U-1.5R	832.5	794.3	38.2cd	255cd
passing beam 0.50U-1.5L	795.6	763.5	32.1cd	255cd
driving beam I_M	95448.0	91659.0	4.0%	10%

3.1.2. Dirty head lamp : After preparation as prescribed in Annex 7 paragraph 2.1. of the Regulation, and confirmation that the illumination values have dropped to 15% to 20 % of the prior values, the head lamp was operated for 1 hour as described in Annex 7 paragraph 2.1.1., with each light source of the specified functions (driving beam/ passing beam) lit successively for the prescribed time.

The visual inspection after this test did not show any distortion, deformation, cracking or change in color of either the headlamp lens or the external lens.

photometric test results (in cd)				
points on screen	initial	end of test	difference	allowable difference
passing beam 0.86D-3.5R	3678.4	3574.6	2.8%	10%
passing beam 0.86D-3.5L	4246.2	4130.7	2.7%	10%
passing beam 0.50U-1.5R	794.3	774.1	20.2cd	255cd
passing beam 0.50U-1.5L	763.5	745.0	18.5cd	255cd
driving beam I_M	91659.0	89395.0	2.5%	10%

Test results : passed / ~~failed~~

Type : SD2
Manufacturer : SHENZHEN CARJENO TECHNOLOGY CO., LTD.

3.2. Change in vertical position of the cut-off line under the influence of heat : Test result in accordance with paragraph 3 of Annex 7 of the Regulation in milliradians (mrad) (maximum deviation measurement):

points on screen	sample no. 1	sample no. 2	maximum permissible
r_3	0.00	--	
r_{60}	-0.52	--	
$r_1 = \lvert r_3 - r_{60} \rvert$	0.52	--	$\Delta r \leq 1$ mrad (upward) $\Delta r \leq 2$ mrad (downward) **→ if failed within extended limits go to sample 2**

4. Color of light emitted

The coloring beam is obtained through : The CIE trichromatic coordinates of the light emitted by the head lamp are within the limits in the paragraph 4.16 of the Regulation.

Chromaticity coordinates		Sample no. 1	Sample no. 2
x		0.3425	0.3394
y		0.3493	0.3452
Tolerance area	Boundaries	W_{12} green boundary: y=0.150+0.640x W_{23} yellowish green boundary: y=0.440 W_{34} yellow boundary: x=0.5000 W_{45} reddish purple boundary y = 0.382 W_{56} purple boundary: y = 0.050 + 0.750 x W_{61} blue boundary: x = 0.310	

5. Additional tests for adjustable reflector : Not applicable

Type : SD2
Manufacturer : SHENZHEN CARJENO TECHNOLOGY CO., LTD.

6. Lamps incorporating lenses of plastic material : The lamp manufacturer proved that the product had already passed the tests prescribed in paragraphs 3.1.-3.5. of Annex 8 to this ECE-Regulation, or the equivalent tests pursuant to another Regulation.

With references to:
Test report No. : GJW2024-3209
issued by
CVC Testing Technology Co., Ltd.
No.3,Tiantaiyi Road,
Kaitai Avenue, Science City,
Guangzhou, China

Report date : August 15, 2024

Those tests need not to be repeated. Only the tests prescribed in appendix 1, table A8-2 were conducted.

6.1. Tests of the complete lamp incorporating a lens of plastic material : The lens of sample No. 1 was conditioned in accordance with the test described in paragraph 3.5.

photometric test results after conditioning (in cd)		
point	illumination measured	illumination required
HV	968.5	≤ 2210
0.86D-3.5L	4279.5	≥1800
0.86D-3.5R	4028.5	≥1800

6.2. Test of adherence of coatings : The sample No.2 complies with the requirements mentioned paragraph 3.6.

Test results **: passed / ~~failed~~**

Type : SD2
Manufacturer : SHENZHEN CARJENO TECHNOLOGY CO., LTD.

Communication concerning the type approval **Appendix 2**

Class of the device : WCR-DS PL

1.	Trade name or mark of the device or system	: Custom Dynamics
2.	Manufacturer's name for the type of device or system	: SD2
3.	Manufacturer's name and address	: SHENZHEN CARJENO TECHNOLOGY CO., LTD. B2, 7th Floor, No. 30, Third Industrial Zone, Houting Community, Shajing Street,Bao'an District, Shenzhen City
4.	If applicable, name and address of the manufacturer's representative	: ---
5.	Submitted for approval on	: May 16, 2024
6.	Technical service responsible for conducting approval tests	: TÜV NORD Mobilität GmbH & Co. KG IFM - Institut für Fahrzeugtechnik und Mobilität Schönscheidtstr. 28 45307 Essen Germany
7.	Date of report issued by that Service	: September 05, 2024
8.	Number of report issued by that Service	: CS149-A0-2024-02271
9.	Brief description	
9.1.	For Headlamps of Classes A and B	
9.1.1.	Category as described by the relevant marking (2)	: ---
9.1.2.	Number, category and kind of light source(s)	: ---
9.1.3.	Reference luminous flux used for the principal passing-beam (lm)	: ---
9.1.4.	Principal passing-beam operated at approximately (V)	: ---
9.1.5.	Measures according to paragraph 4.12. of this Regulation	: ---

Type : SD2
Manufacturer : SHENZHEN CARJENO TECHNOLOGY CO., LTD.

9.1.6. Number and specific identification code(s) of LED module(s) and for each LED module a statement whether it is replaceable or not : ~~yes/no~~ (1)

9.1.7. Number and specific identification code(s) of electronic light source control gear(s): : ---

9.1.8. Total objective luminous flux as described in paragraph 4.5.6. of this Regulation exceeds 2,000 lumens : ~~yes/no/does not apply~~ (1)

9.1.9. The adjustment of the cut-off has been determined at : ~~10 m/25 m/does not apply~~ (1)

The determination of the minimum sharpness of the 'cut-off' has been carried out at : ~~10 m/25 m/does not apply~~ (1)

9.2. For headlamps of Class D

9.2.1. Headlamp/system submitted for approval as type (3) : ---

9.2.2. The passing beam light source may/may not (1) be lit simultaneously with the driving beam light source and/or another reciprocally incorporated headlamp.

9.2.3. The rated voltage of the device is : ---

9.2.4. Number, category and kind of light source(s) : ---

9.2.4.1. If more than one objective luminous flux value is specified: ---

Objective luminous flux value used for the principal passing beam : ---

9.2.4.2. If more than one objective luminous flux value is specified:

Objective luminous flux value used for the driving beam : ---

9.2.5. Trade name and identification number of separate ballast(s) or part(s) of ballast(s) : ---

9.2.6. The adjustment of the 'cut-off' has been determined at 10 m/25 m (1)

The determination of the minimum sharpness of the 'cut-off' has been carried out at 10 m/25 m (1)

Type : SD2
Manufacturer : SHENZHEN CARJENO TECHNOLOGY CO., LTD.

9.2.7.	Number and specific identification code(s) of LED module(s)	: ---
9.2.8.	Distributed lighting system with one common gas-discharge light source	: ~~yes/no~~ (1)
9.2.9.	Remarks (if any)	: ---
9.2.10.	Measures according to paragraph 4.12. of this Regulation	: ---
9.3.	For AFS – Systems	
9.3.1.	Category as described by the relevant marking (4)	: ---
9.3.2.	Number, category and kind of light source(s)	: ---
9.3.2.1.	Number and specific identification code(s) of LED module(s) and for each LED module a statement whether it is replaceable or not	: ~~yes/no~~ (1)
9.3.2.2.	Number and specific identification code(s) of electronic light source control gear(s), if applicable	: ---
9.3.2.3.	Total objective luminous flux as described in paragraph 4.5.2.6. of this Regulation exceeds 2,000 lumen	: ~~yes/no~~ (1)

9.3.3. (a) Indications according to paragraph 5.3.5.1. of this Regulation (which lighting unit(s) provide a 'cut-off' as defined in Annex 5 of this Regulation, that projects into a zone extending from 6 degrees left to 4 degrees right and upwards from a horizontal line positioned at 0.8 degree down) : ---

(b) The adjustment of the 'cut-off' has been determined at ~~10 m/25 m~~ (1)

(c) The determination of the minimum sharpness of the 'cut-off' has been carried out at ~~10 m/25 m~~ (1)

9.3.4.	The vehicle(s) for which the system is intended as original equipment	: ---

9.3.5. Whether approval is sought for a system which is not intended to be included as part of the approval of a vehicle type according to UN Regulation No. 48 : ~~yes/no~~ (1)

9.3.5.1. If in the affirmative: information sufficient to identify the vehicle(s) for which the system is intended : ---

9.3.6. Indications according to paragraph 5.3.5.2. of this Regulation (which class E passing beam mode(s), if any, comply with a 'data set' of Table 14 of this Regulation) : ---

9.3.7. Whether approval is sought for a system intended to be installed on vehicles only, which provide means for a stabilization/limitation of the system's supply : ~~yes/no~~ (1)

9.3.8. The adjustment of the 'cut-off' has been determined at ~~10 m/25 m~~ (1)

The determination of the minimum sharpness of the 'cut-off' has been carried out at ~~10 m/25 m~~ (1)

9.3.9. The system is designed to provide passing beams of (5)

9.3.9.1. Class C ☐ Class V ☐ Class E ☐ Class W ☐

9.3.9.2. With the following mode(s), identified by the designation(s), if it applies (6)

Mode No. C	Mode No. V …	Mode No. E …	Mode No. W …
Mode No. C …	Mode No. V …	Mode No. E …	Mode No. W …
Mode No. C …	Mode No. V …	Mode No. E …	Mode No. W …

9.3.9.3. Where the lighting units indicated below are energized (5) (6) (7) for the mode No. …

(a) If no bend lighting applies:

Left side	No 1 ☐	No 3 ☐	No 5 ☐	No 7 ☐	No 9 ☐	No 11 ☐
Right side	No 2 ☐	No 4 ☐	No 6 ☐	No 8 ☐	No 10 ☐	No 12 ☐

(b) If bend lighting of category 1 applies:

Left side	No 1 ☐	No 3 ☐	No 5 ☐	No 7 ☐	No 9 ☐	No 11 ☐
Right side	No 2 ☐	No 4 ☐	No 6 ☐	No 8 ☐	No 10 ☐	No 12 ☐

(c) If bend lighting of category 2 applies:

Left side No 1 ☐ No 3 ☐ No 5 ☐ No 7 ☐ No 9 ☐ No 11 ☐

Right side No 2 ☐ No 4 ☐ No 6 ☐ No 8 ☐ No 10 ☐ No 12 ☐

Note: Indications according to paragraph (a) through (c) above are needed additionally for each further mode.

9.3.9.4. The lighting units marked below are energized, when the system is in its neutral state (5) (6) (7)

Left side No 1 ☐ No 3 ☐ No 5 ☐ No 7 ☐ No 9 ☐ No 11 ☐

Right side No 2 ☐ No 4 ☐ No 6 ☐ No 8 ☐ No 10 ☐ No 12 ☐

9.3.9.5. The lighting units marked below are energized, when the system is in its traffic change function (5) (6) (7)

(a) If no bend lighting applies:

Left side No 1 ☐ No 3 ☐ No 5 ☐ No 7 ☐ No 9 ☐ No 11 ☐

Right side No 2 ☐ No 4 ☐ No 6 ☐ No 8 ☐ No 10 ☐ No 12 ☐

(b) If bend lighting of category 1 applies:

Left side No 1 ☐ No 3 ☐ No 5 ☐ No 7 ☐ No 9 ☐ No 11 ☐

Right side No 2 ☐ No 4 ☐ No 6 ☐ No 8 ☐ No 10 ☐ No 12 ☐

(c) If bend lighting of category 2 applies:

Left side No 1 ☐ No 3 ☐ No 5 ☐ No 7 ☐ No 9 ☐ No 11 ☐

Right side No 2 ☐ No 4 ☐ No 6 ☐ No 8 ☐ No 10 ☐ No 12 ☐

9.3.10. The system is designed to provide a main beam (5) (6)

9.3.10.1. Yes ☐ No ☐

9.3.10.2. With the following mode(s), identified by the designation(s), if it applies:---

Main beam mode No M 1

Main beam mode No M …

Main beam mode No M …

Type : SD2
Manufacturer : SHENZHEN CARJENO TECHNOLOGY CO., LTD.

9.3.10.3. Where the lighting units marked below are energized, for mode No. …[5] [6] [7]

(a) If no bend lighting applies:

Left side	No 1 ☐	No 3 ☐	No 5 ☐	No 7 ☐	No 9 ☐	No 11 ☐
Right side	No 2 ☐	No 4 ☐	No 6 ☐	No 8 ☐	No 10 ☐	No 12 ☐

(b) If bend lighting of category 1 applies:

Left side	No 1 ☐	No 3 ☐	No 5 ☐	No 7 ☐	No 9 ☐	No 11 ☐
Right side	No 2 ☐	No 4 ☐	No 6 ☐	No 8 ☐	No 10 ☐	No 12 ☐

Note: Indications according to paragraph (a) through (b) above are needed additionally for each further mode.

9.3.10.4. The lighting units marked below are energized, when the system is in its neutral state [5] [6] [7]

Left side	No 1 ☐	No 3 ☐	No 5 ☐	No 7 ☐	No 9 ☐	No 11 ☐
Right side	No 2 ☐	No 4 ☐	No 6 ☐	No 8 ☐	No 10 ☐	No 12 ☐

9.3.10.5. The system is designed to provide an adaptation of the driving beam for: [5]

Right-Hand and Left-Hand traffic	: Yes ☐	No ☐
Right-Hand traffic only	: Yes ☐	No ☐
Left-Hand traffic only	: Yes ☐	No ☐

9.4. For headlamps of Classes ~~AS, BS, CS~~, DS ~~and ES~~

9.4.1.	Category as described by the relevant marking [8]	: WCR-DS PL
9.4.2.	Number, category and kind of light source(s), if any	: One LED module have 7*LEDs in total , 7 LEDs, 12V, 45W for Driving beam, 3 LEDs, 12V, 30W for Passing beam
9.4.3.	Number and specific identification code(s) of LED modules and for each LED module a statement whether it is replaceable or not	: Number of LED modules: 1 for HB and LB specific identification code of LED modules: not applicable Replaceable or not: ~~yes~~/no [1]
9.4.4.	Number and specific identification code(s) of electronic light source control gear(s), if any	: ---

9.4.5. The determination of 'cut-off' sharpness: ~~yes~~/no [1]

If yes, it was carried out at 10 m/25 m [1]

Type : SD2
Manufacturer : SHENZHEN CARJENO TECHNOLOGY CO., LTD.

9.4.6.	Trade name and identification number of separate ballast(s) or part(s) of ballast(s)	: ---
9.4.7.	The passing beam light source may/~~may not~~ (1) be lit simultaneously with the driving beam light source and/or another reciprocally incorporated headlamp	
9.4.8.	The minimum bank angle(s) to satisfy the requirement of paragraph 5.4.5.2., if any	: ---
9.4.9.	Primary Driving Beam	: yes/~~no~~ (1)
	Secondary Driving Beam	: ~~yes~~/no (1)
	~~The Secondary Driving Beam shall only be operated together with a passing beam or a primary driving beam.~~	
9.5.	For front fog lamps Class F3	
9.5.1.	Class as described by the relevant marking (F3, F3/, F3PL, F3/PL)	: ---
9.5.2.	Number, category and kind of light source(s)	: ---
9.5.3.	LED module: yes/no (1) and for each LED module a statement whether it is replaceable or not	: ~~yes/no~~ (1)
9.5.4.	LED module specific identification code	: ---
9.5.5.	Application of electronic light source control gear	: ~~yes/no~~ (1)
	Supply to the light source	: ---
	Specification of the light source control gear	: ---
	Input voltage (9) (10)	---
	In the case of an electronic light source control gear not being part of the lamp:	
	Output signal specification	: ---
9.5.6.	Colour of light emitted	: ~~white/selective yellow~~ (1)
9.5.7.	Luminous flux of the light source (see paragraph 4.5.2.6.)	
	greater than 2,000 lumens	: ~~yes/no~~ (1)

Type : SD2
Manufacturer : SHENZHEN CARJENO TECHNOLOGY CO., LTD.

9.5.8.	Luminous intensity is variable	: ~~yes/no~~ (1)
9.5.9.	The determination of the cut-off gradient (if measured) was carried out at ~~10 m/25 m~~ (1)	
9.6.	For cornering lamps	
9.6.1.	Number, category and kind of light source(s) (11)	: ---
9.6.2.	Voltage and wattage	: ---
9.6.3.	Light source module	: ~~yes/no~~ (1)
9.6.4.	Light source module specific identification code	: ---
9.6.5.	Application of an electronic light source control gear: ---	
	(a) Being part of the lamp	: ~~yes/no~~ (1)
	(b) Being not part of the lamp	: ~~yes/no~~ (1)
9.6.6.	Input voltage supplied by an electronic light source control gear	: ---
9.6.7.	Electronic light source control gear manufacturer and identification number (when the light source control gear is part of the lamp but is not included into the lamp body)	: ---
9.6.8.	Geometrical conditions of installation and relating variations, if any	: ---
10.	Approval mark(s) position(s)	: marked on lens
11.	Reason(s) for extension of approval (if applicable)	: ---
12.	Approval	granted/~~extended~~/~~refused~~/~~withdrawn~~ (1)

Type : SD2
Manufacturer : SHENZHEN CARJENO TECHNOLOGY CO., LTD.

---

(1) Strike out what does not apply.
(2) Indicate the appropriate marking selected from the list below:

C, C, C, R, R PL, CR, CR, CR, C/R, C/R, C/R, C/, C/, C/,

C, PL, C PL, C PL, CR PL, CR PL, CR PL, C/R PL, C/R PL, C/R PL,

C/PL, C/PL, C/PL,

HC, HC, HC, HR, HR PL, HCR, HCR, HCR, HC/R, HC/R, HC/R, HC/, HC/, HC/,

HC PL, HC PL, HC PL, HCR PL, HCR PL, HCR PL, HC/R PL, HC/R PL, HC/R PL,

HC/PL, HC/PL, HC/PL,

(3) Indicate the appropriate marking selected from the list below:

DC DC/, DC/PL, DR, DCR, DC/R, DC PL, DR PL, DCR DC/R
DC, DCR, DC/R, DC/, DC PL, DCR PL, DC/R PL, DC/PL, PL, PL,

DC, DCR, DC/R, DC/, DC PL, DCR PL, DC/R PL, DC/PL,

(4) Indicate the appropriate marking as foreseen according to this Regulation for each installation unit or assembly of installation units.
(5) Mark with an X where applicable.
(6) To be extended if more modes are provided.
(7) To be continued if more units are provided.
(8) Indicate the appropriate marking selected from the list below:

C-AS,	C-BS,	R-BS,	CR-BS,	C/-BS,	C/R-BS,
	C-BS PL,	R-BS PL,	CR-BS PL,	C/-BS PL,	C/R-BS PL,
WC-CS,	WC-DS,	WR-CS,	WR-DS,	WCR-CS,	WCR-DS,
WC/-CS,	WC/-DS,	WC/R-CS,	WC/R-DS,	WC-CS PL,	
WC-DS PL,	WR-CS PL,	WR-DS PL,	WCR-CS PL,	WCR-DS PL,	
WC/CS PL,	WC/-DS PL,	WC/R-CS PL,	WC/R-DS PL,		
WC+-CS,	WC+-DS,	WC+R-CS,	WC+R-DS,	C+-BS,	C+R-BS,
WC+-CS PL,	WC+-DS PL,	WC+R-CS PL,	WC+R-DS PL,	C+-BS PL,	C+R-BS PL,
WC-ES,	WR-ES,	WCR-ES,	WC/-ES,	WC/R-ES,	WC-ES PL,
WR-ES PL,	WCR-ES PL,	WC/-ES PL,	WC/R-ES PL		
WC+-ES,	WC+R-ES,	WC+-ES PL,	WC+R-ES PL		

(9) The voltage specifications shall include the tolerances or voltage range as specified by the manufacturer and verified by this approval.
(10) The parameters of the input voltage including duty cycle, frequency, pulse shape and peak voltage shall be included.
(11) For cornering lamps with non-repleable light sources indicate the number and total wattage of the light sources used.

Application date May 16, 2024

1. Specification data

Type		SD2	
Function		Headlamp	
		Driving beam	Passing beam
Emitted colour		White	White
Rated	Voltage	12V	
	Wattage	45W	30W
Applicable Regulation (UN)		R149.00 Class DS (WCR-DS PL)	
Number and category of light source		One LED module have 7*LEDs in total , 7 LEDs for Driving beam, 3 LEDs for Passing beam	
		Non-replaceable	
Location of marking	Rated voltage/ Wattage	Marked on Housing	
	Trade mark	Custom Dynamics	Marked on Lens
	Approval mark	Marked on Lens	

2. Construction and material

Construction	Material	Remarks
Outer Lens	PC Type: Panlite L-1250Z 100-K Manufacturer: Teijin Polycarbonate China Ltd Coating: UVHC3000	Clear, without pattern
Inner lens	PC	Clear, without pattern
Reflector	Driving beam: PC	Aluminum coating
Housing	Aluminium	Black
Electrical wiring	Copper covered with insulation	-

3. Apparent surface/mm

Function	Upside	Downside	Inside	Outside
Passing beam	15	38.1	57	57
Driving beam	15	108.6	57.9	57.9

4. Installation

4.1. Application of an electronic light source control gear: No Input voltage supplied by an electronic light source control gear: --
4.2. One LED module have 7*LEDs in total, 3*LEDs (1LED with 3 chips)work for Low beam, lit together for High beam, 4*LEDs only work for High beam. Module being part of lamp and include into lamp body, non-replaceable.
4.3. Only for limited mounting height of equal to or less than 750 mm above the ground: No

4.4. Mechanical, electromechanical or others devices to provide alternately Low & high: No.
Mechanical, electromechanical or others devices to provide bend lighting: No.

5. Name and address of manufacturer: SHENZHEN CARJENO TECHNOLOGY CO., LTD.
B2, 7th Floor, No. 30, Third Industrial Zone, Houting Community, Shajing Street,Bao'an District, Shenzhen City

6. Name and address of representative of manufacturer: Not applicable

This information document consists of 3 pages.

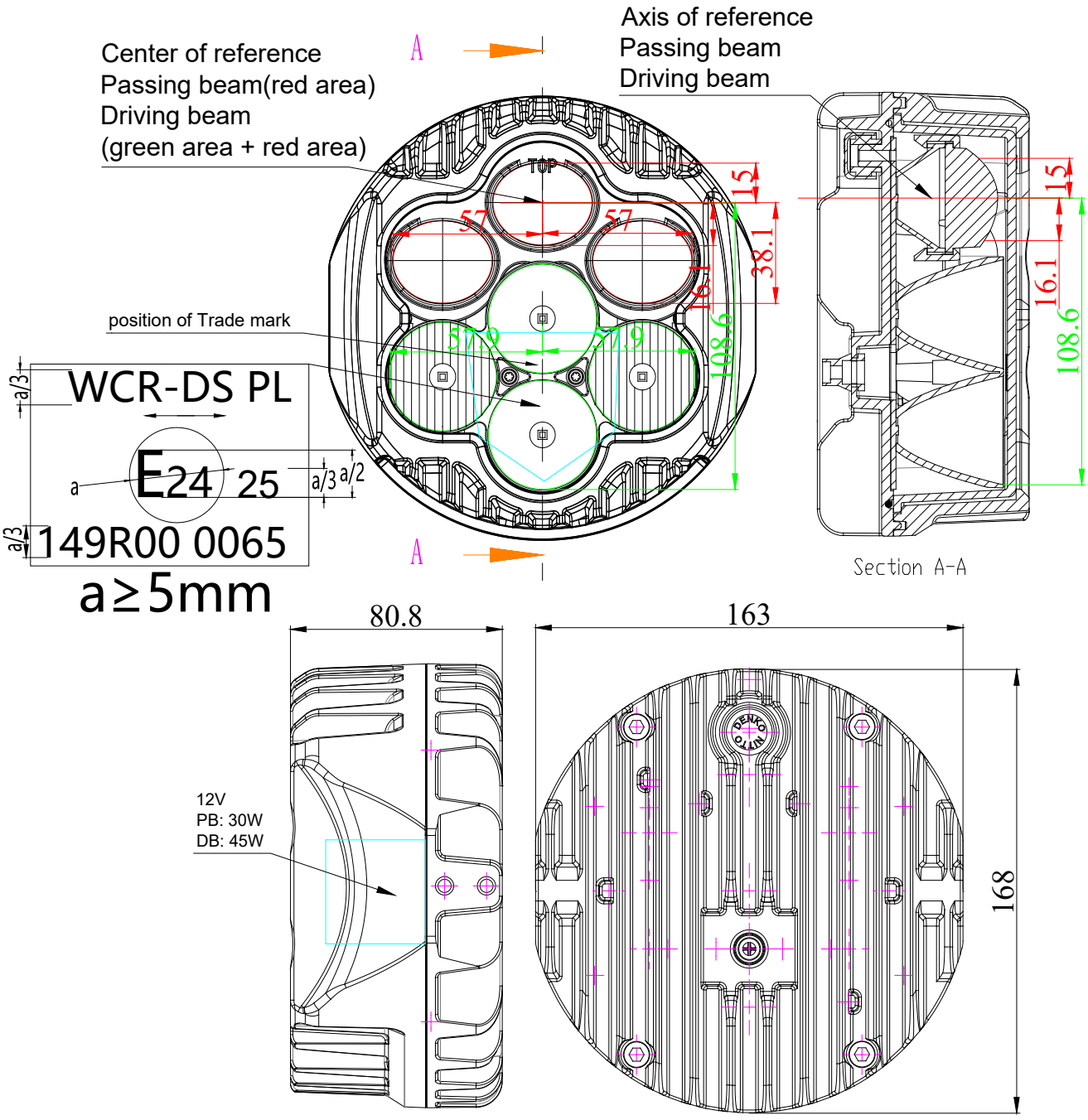

CIRCUIT DIAGRAM

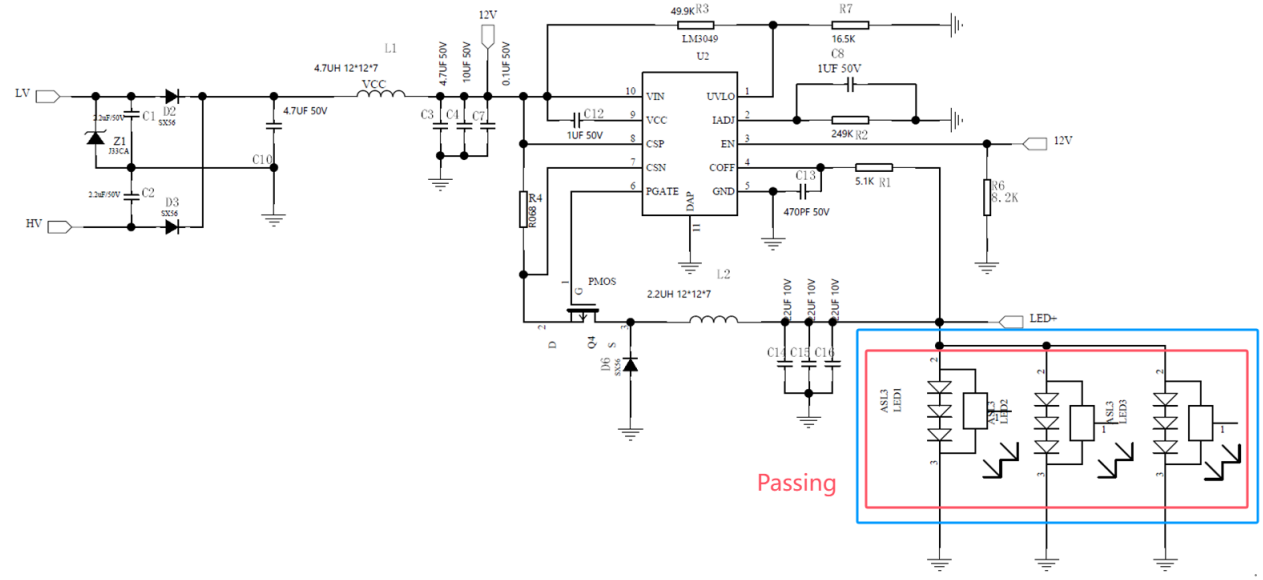

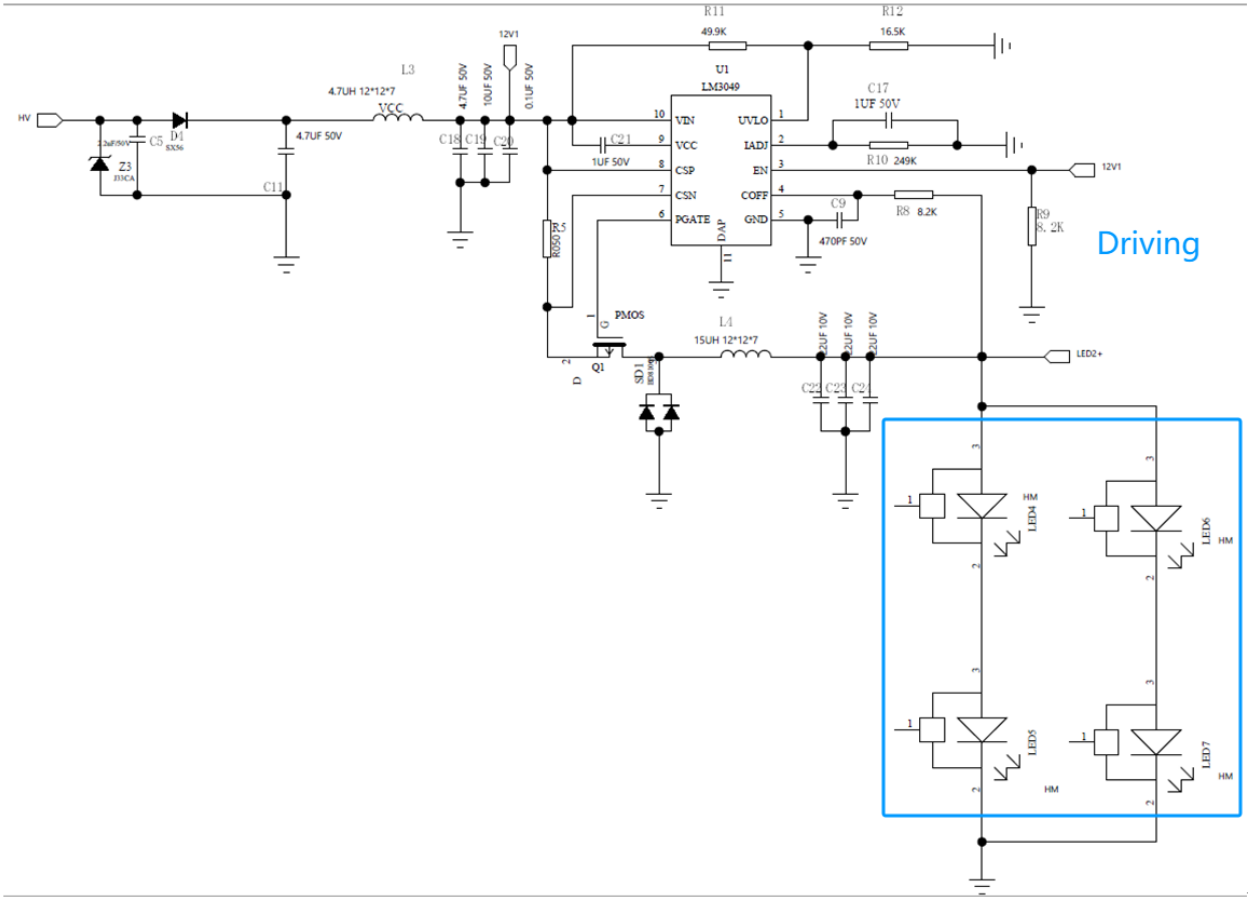

Passing beam: 12V 30W

Driving beam: 12V 45W

One LED module have 7*LEDs in total ,

7 LEDs for Driving beam, 3 LEDs for Passing beam

Non-replaceable