! Safety instructions!

For mounting, jack up the vehicle in the middle of the frame so that it is secured against falling over and the rear wheel is not in contact with the ground.



- When mounting the rear, ensure sufficient clearance to all moving parts.

- We recommend using a medium-strength screw lock (e.g. LOCTITE 243, blue) for the screws.

- To mount the rear it is necessary to remove the original rear incl. licence plate holder and light system. A side licence plate holder incl. licence plate light (e.g. HD-BRO020) must be fitted. The lighting system installed in the Cult-Werk rear end complies with the legal requirements.

Scope of delivery

(a) 1 x Cult-Werk ABS rear fender
(b) 1 x Cult-Werk Metal rear inner fender
(c) 1 x Cult-Werk Bench
(d) 2 x LED indicator (E1 EC-MI007LED, 50R-00 4271)
(e) 1 x LED Brake/tail light (E4 EC-TL008LED, 50R-00 1993)
(f) 1 x Mounting material consisting of:
  (1) 6 x Oval-head screw ISO7380 M6x20
  (2) 2 x Hexagon head screw ISO4014 M6x30
  (3) 2 x Oval-head screw ISO7380 M6x12
  (4) 10 x Body washer M6x20
  (5) 4 x Countersunk screw ähnl. DIN7991, 3/8“ – 16 UNC x 1“

Dismantling original parts

1. Remove the seat by loosening the rear screw and pulling the seat back.
2. disconnect the wiring of the rear end
3. loosen the fastening screws of the rear fender (6, fig.1) - now the entire original rear can be removed.

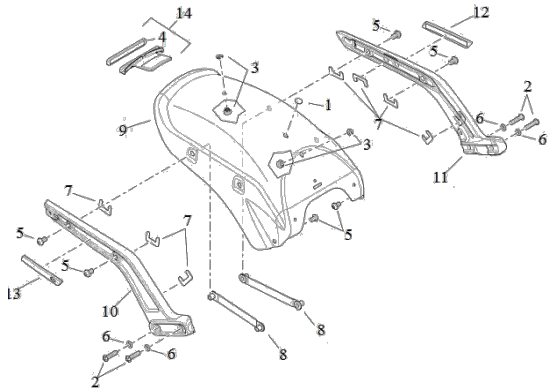

Abb. 1



Abb. 2

Before mounting, the turn signals and brake/tail lights must be glued into the rear with a suitable mounting adhesive.

Lighting used:

2 x LED Indicator: E1 – EC-MI007LED
1 x Rear/brake light: E4 – EC-TL008LED

Rear assembly

1. Fasten the metal inner fender to the frame with the countersunk screws (4 x DIN7991). (Abb.3)



Abb. 3

2. give the ABS tail over the inner fender.
   During the following assembly, be careful not to tighten the screws completely - the parts must remain movable for alignment !
3. fix this from behind with the screws supplied. (Abb.4, 6 x M6x30 + Disc)
4. fix the rear also to the front fixing points. (Abb.5, 2 x M6x30 + Disc)



Abb. 4



Abb. 5

Intermediate step for 2-seater rear

Place the seat pad in the recess provided for it in the rear and fix it in place with the screws. (Abb.7, 2x M8x20 + 2x M8x30)



Abb.6

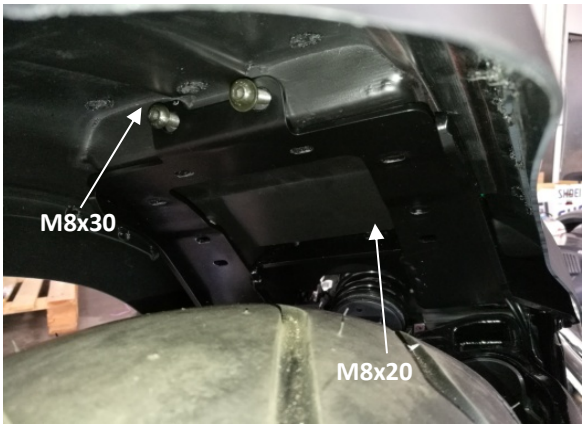

Abb. 7

5. now align the rear and tighten the fixing screws.
6. thread the connections of the lighting to the front under the seat space. There the wiring must be carried out properly.

7. insert the seat from above and fix it from behind



Abb.8



Abb.9 Montiertes 2-Sitzer Heck

When mounting the rear, ensure sufficient clearance to all moving parts.

We recommend using a medium-strength screw lock (e.g. LOCTITE 243, blue) for the screws.